# FreeCAD

## A hackable design platform

Yorik van Havre

FOSDEM 2015

- Please tweet with #FreeCAD
- Interrupt me when you want
- PDF of this talk on http://yorik.uncreated.net
- This presentation is shamelessly copied from a talk by Ryan Gordon

# Yorik van Havre

- Architect (houses, not information), and one of the main FreeCAD devs
- http://yorik.uncreated.net
- yorik@uncreated.net
- @yorikvanhavre

# Self-promotion moment
## (You can skip in 5...4...3...)

# http://www.freecadweb.org

- Homepage with download info, etc
- Documentation wiki
- VERY active forum (← go there)
- Bug tracker

# What is FreeCAD

- Made to model “anything that will be built in the real world”
- Parametric (3D objects are controlled by parameters, for ex. Height or Length, or another object)
- LOVES standards

File Edit View Tools Macro Architecture Draft Windows Help

Arch

Combo View

Model Tasks

Labels & Attributes

Application

- testhouse
  - Construction
  - Annotations
    - Plan Annotations
    - Section A Annotations
  - Site
    - Testhouse 2
      - Ground floor
        - Structures
          - Superstructure
          - Metallic structure
        - Walls
        - Accessories
        - Spaces

| Property | Value |
|---|---|
| **Arch** | |
| Show Nodes | false |
| **Base** | |
| Bounding B... | false |
| Deviation | 0.50 |
| Display Mode | Flat Lines |
| Draw Style | Solid |
| Lighting | Two side |
| Line Color | [0, 0, 0] |
| Line Width | 1.00 |
| Node Color | [255, 255, 255] |
| Node Line | 0.00 |
| Node Size | 6.00 |
| Point Color | [0, 0, 0] |
| Point Size | 3.00 |

View Data

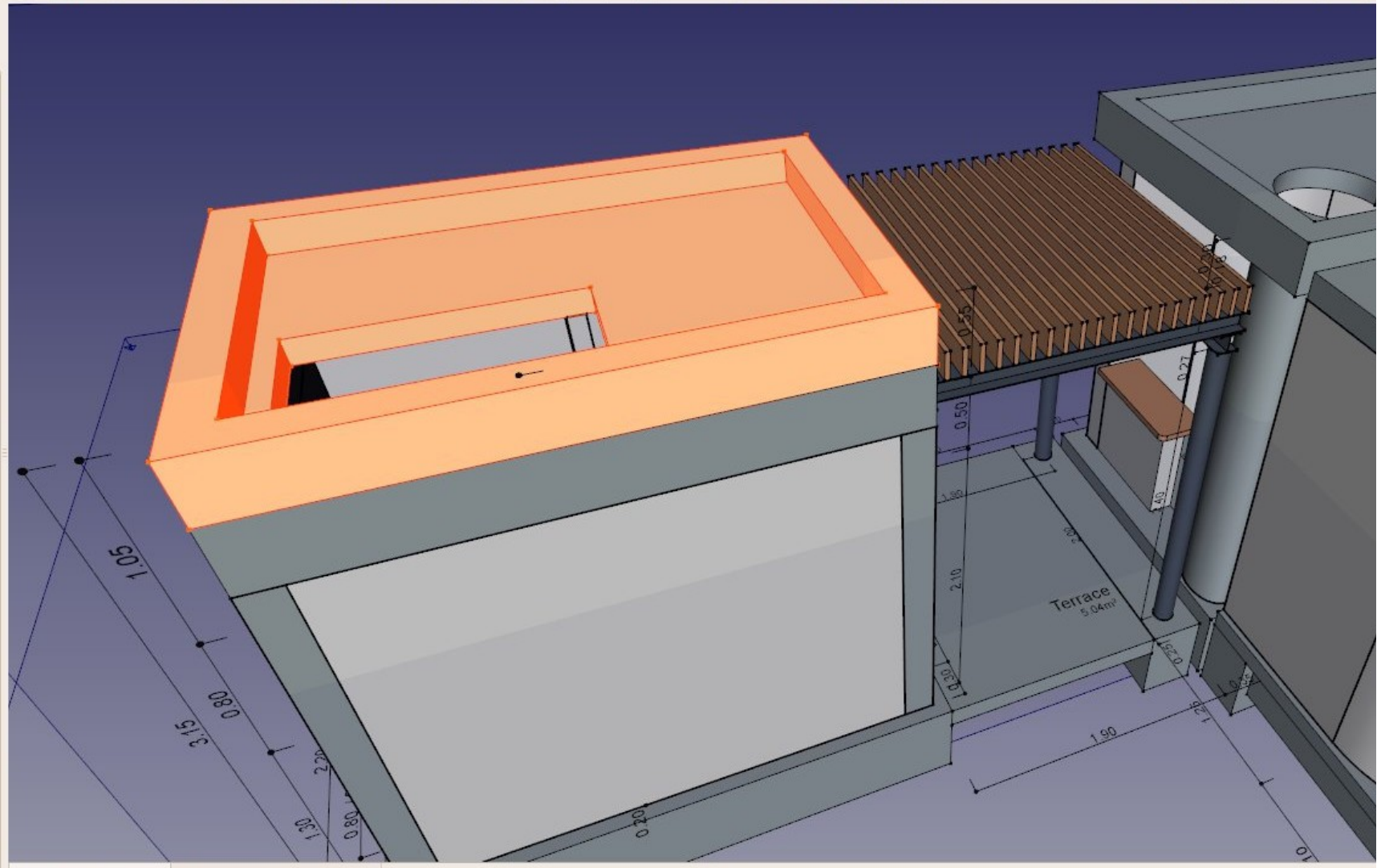


testhouse : 1 testhouse : A3 Page

Selection view

Search

testhouse.Structure013 (Roof slab)

Report view

```
Sel : Add Selection
"testhouse.Structure013.Face15(2132.004150,-100.000000,2
937.734619)"
Sel : Clear selection
Sel : Add Selection "testhouse.Structure013.(null)
(2132.004150,-100.000000,2937.734619)"
Hide main window
Active view is testhouse : 1[*] (at 0x3a963b0)
Show main window
```

Python console

```
>>> App.ActiveDocument=None
>>> Gui.ActiveDocument=None
>>> import FreeCAD
>>> FreeCAD.open(u"/home/yorik/Dropbox/Public/testhouse/testhouse.FcStd")
>>> App.setActiveDocument("testhouse")
>>> App.ActiveDocument=App.getDocument("testhouse")
>>> Gui.ActiveDocument=Gui.getDocument("testhouse")
>>> Gui.activeDocument().activeView().setCameraType("Perspective")
>>>
```

Preselected: testhouse.Section. (3418.864502,-2227.726807,1750.000000)

Combo View

Model | Tasks

Help | Close

**Solver messages**

Under-constrained sketch with 19 degrees of freedom

Solved in 0 sec

**Edit controls**

Show grid

Grid size: 10 mm

Grid snap

Auto constraints

**Constraints**

Filter: Normal

- Constraint1
- Constraint3
- Constraint5
- Constraint6
- Constraint7
- Constraint9
- Constraint11

**Elements**

Type: Edge

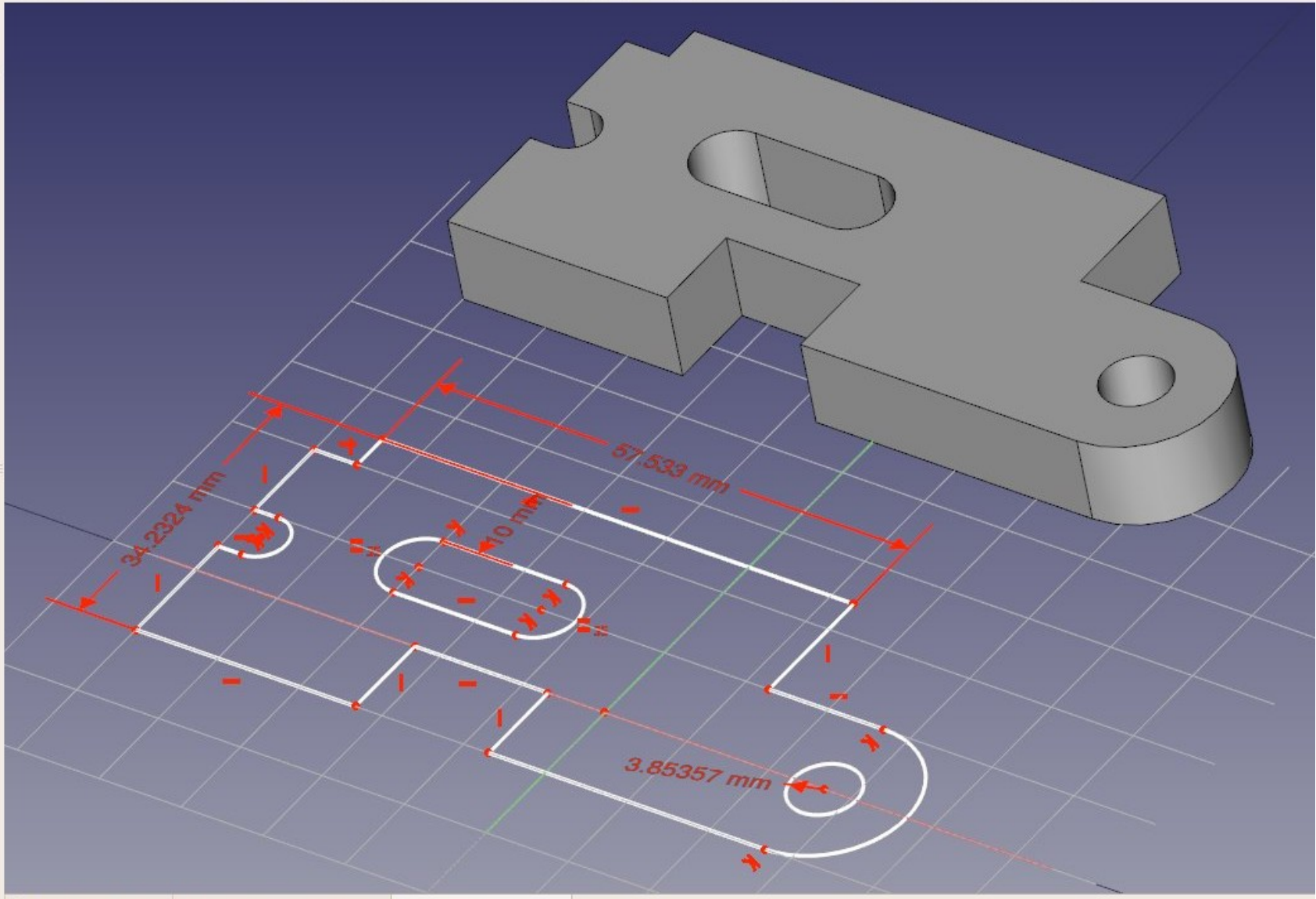


testhouse : 1 | testhouse : A3 Page | Unnamed1 : 1*

Selection view

Search

Report view

```
Sel : Add Selection "Unnamed.Sketch.(null)
(0.000000,0.000000,0.000000)"
Sel : Clear selection
Sel : Add Selection
"Unnamed.Pad001.Face23(-37.032871,52.429699,10.000000)"
Active view is Unnamed1 : 1[*] (at 0x8db6980)
Sel : Clear selection
Active view is Unnamed1 : 1[*] (at 0x8db6980)
Sel : Clear selection
```

Python console

```
>>> App.getDocument('Unnamed').recompute()
>>> Draft.move([FreeCAD.ActiveDocument.Pad001],FreeCAD.Vector(0.0,94.18
>>> FreeCAD.ActiveDocument.recompute()
>>> Gui.getDocument('Unnamed').resetEdit()
>>> App.getDocument('Unnamed').recompute()
>>> FreeCADGui.getDocument("Unnamed").getObject("Pad001").ShapeColor =
>>> FreeCADGui.getDocument("Unnamed").getObject("Pad001").ShapeColor =
>>>
```

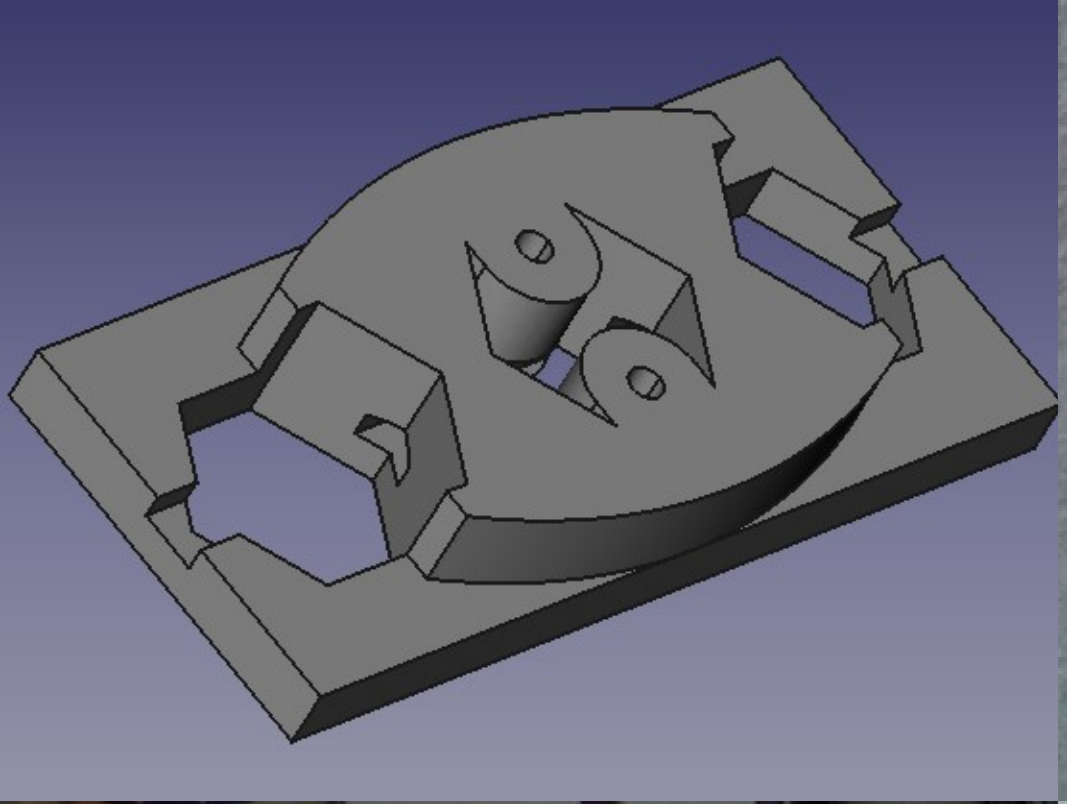


53.6
73.1

MakerBot Thingiverse DASHBOARD EXPLORE CREATE Enter a search term SIGN IN / JOIN

Advanced Search

629 results for "freecad": Things

Sort: Relevant

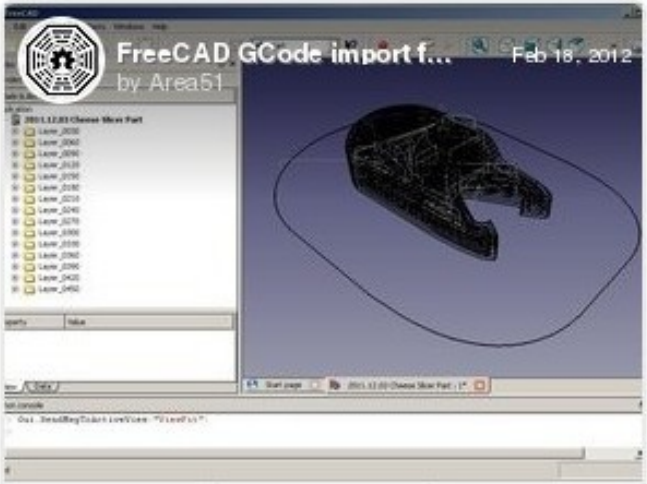


33 40 6

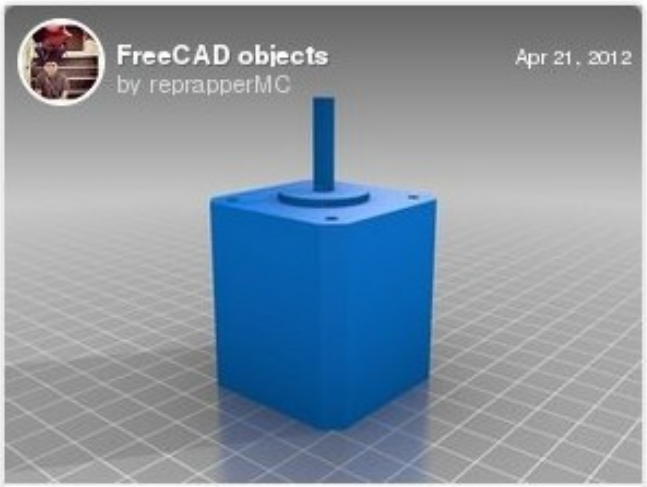


8 11 0

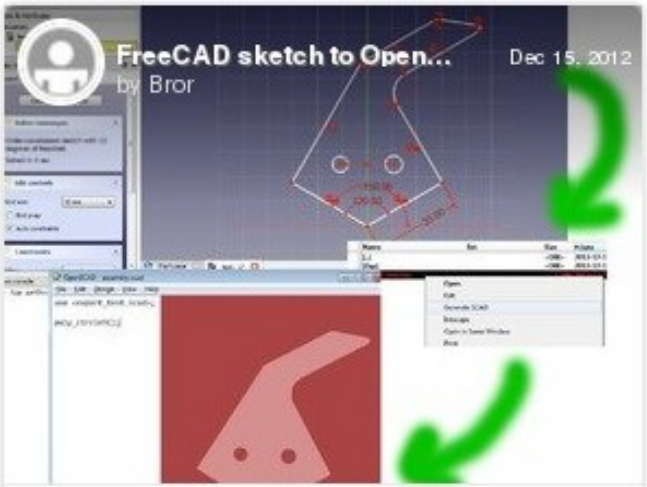


21 43 1

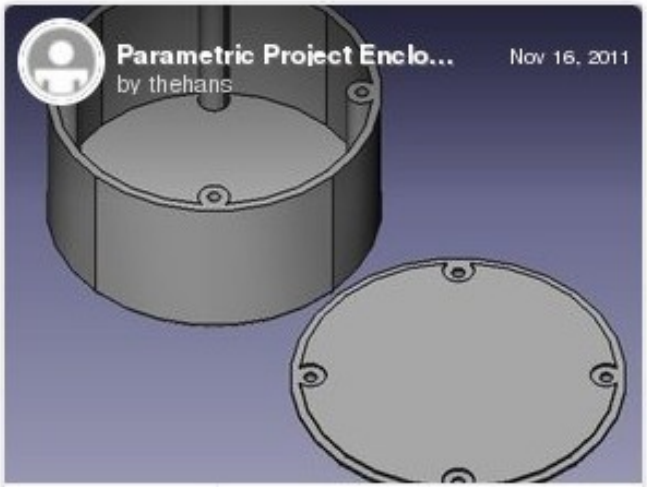


75 98 13

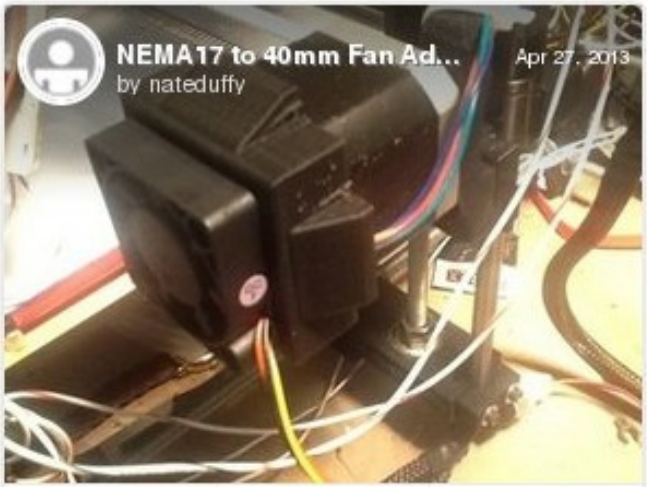


13 34 0

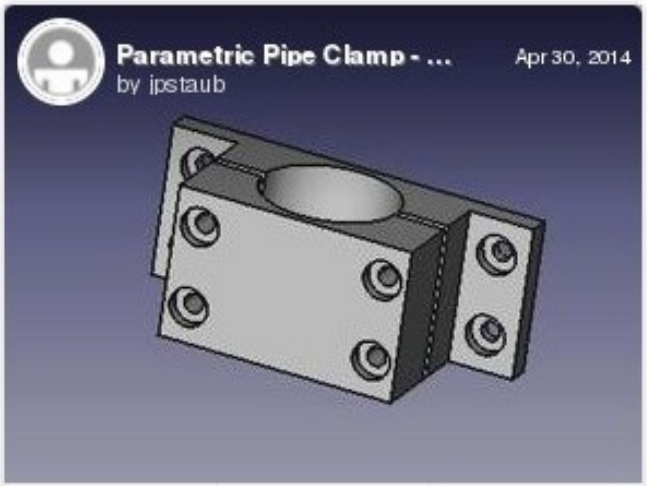


12 18 3

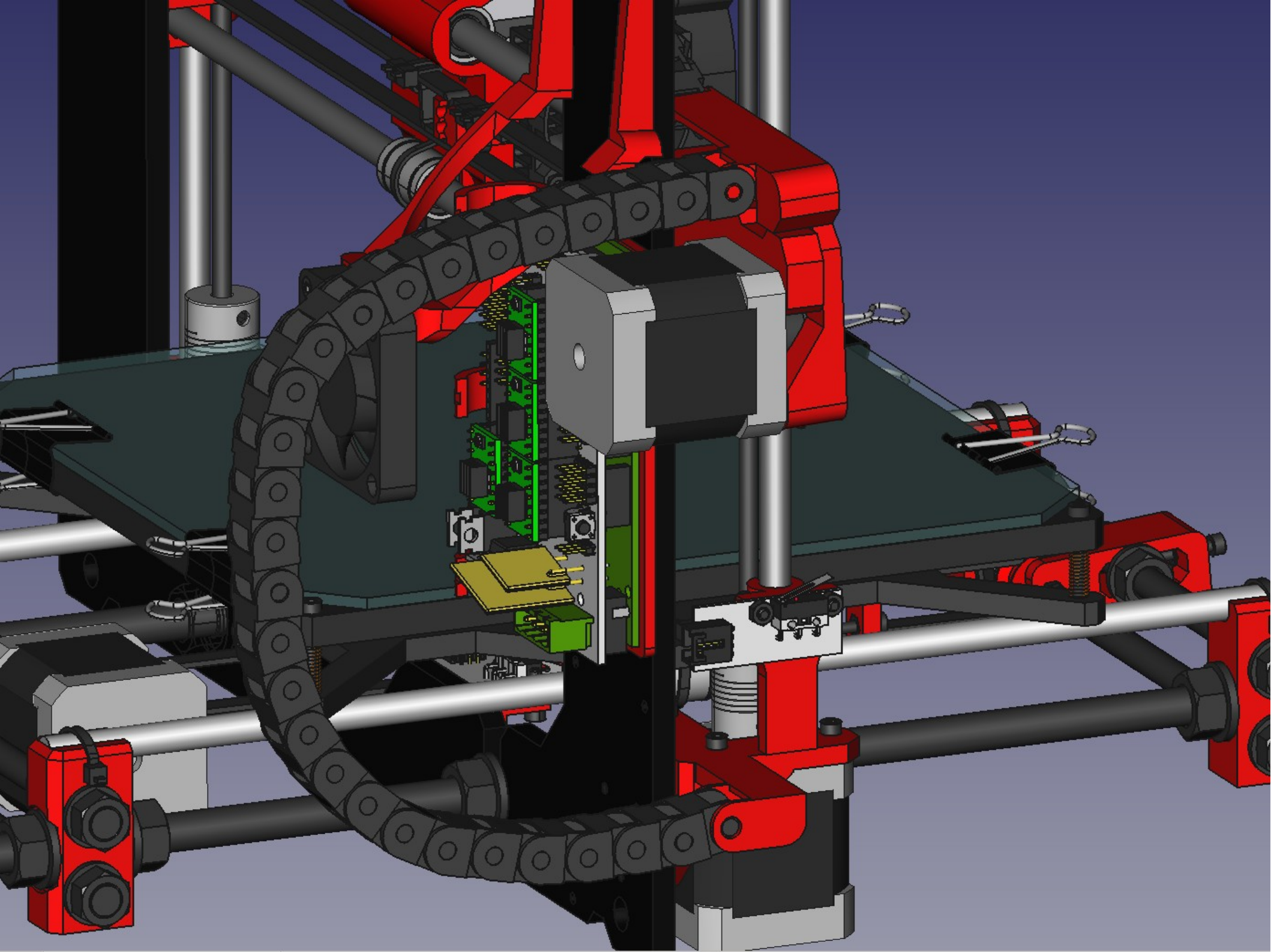

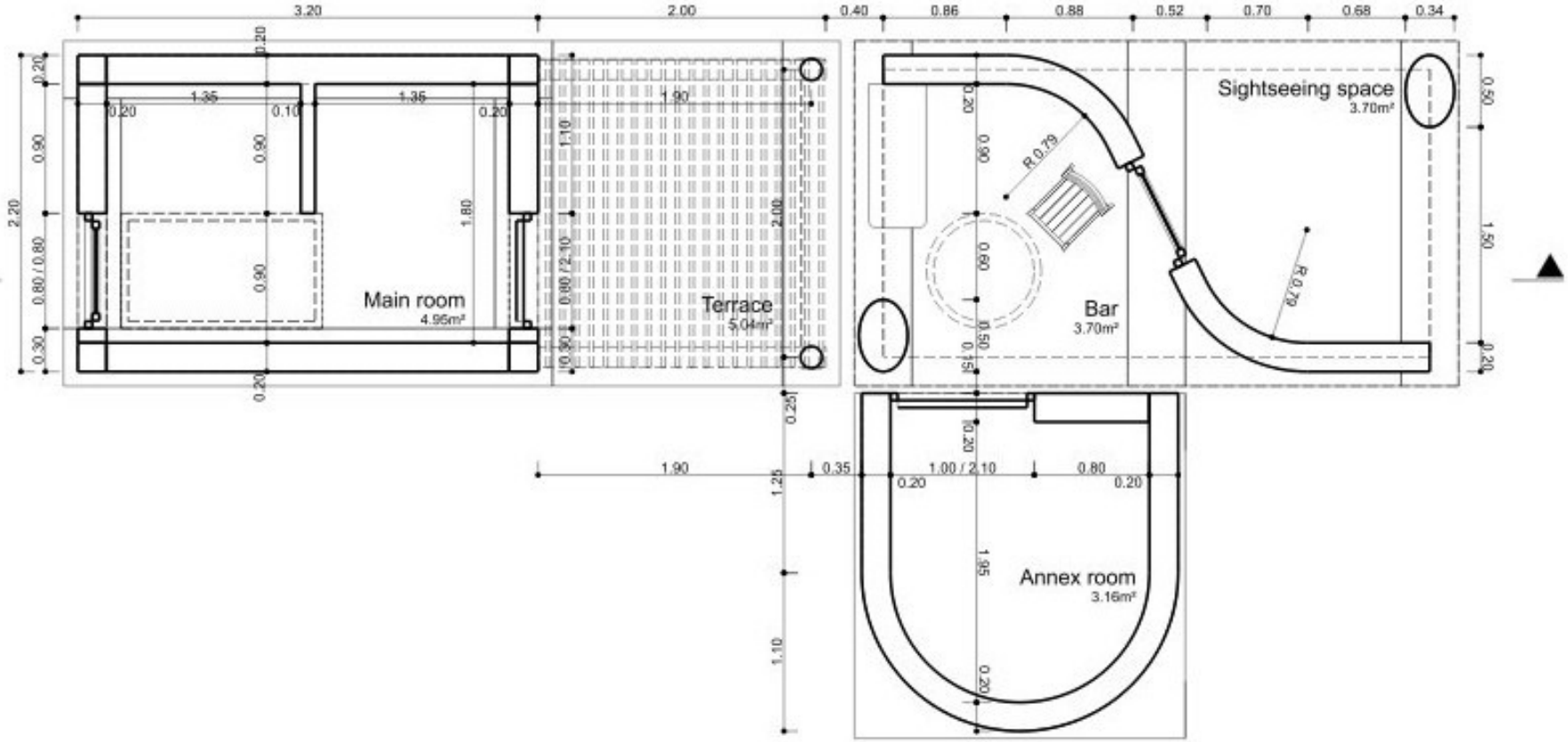


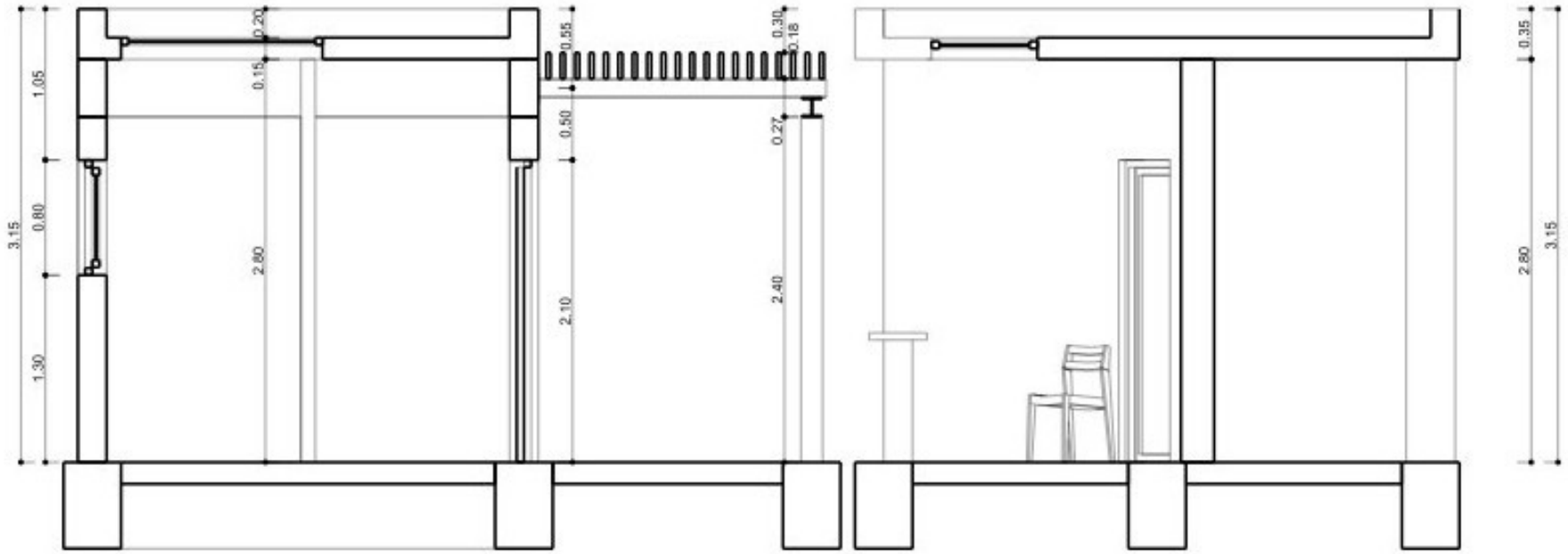

# Test Ho

Plan and Se

Scale: 1:33

Made with FreeCAD

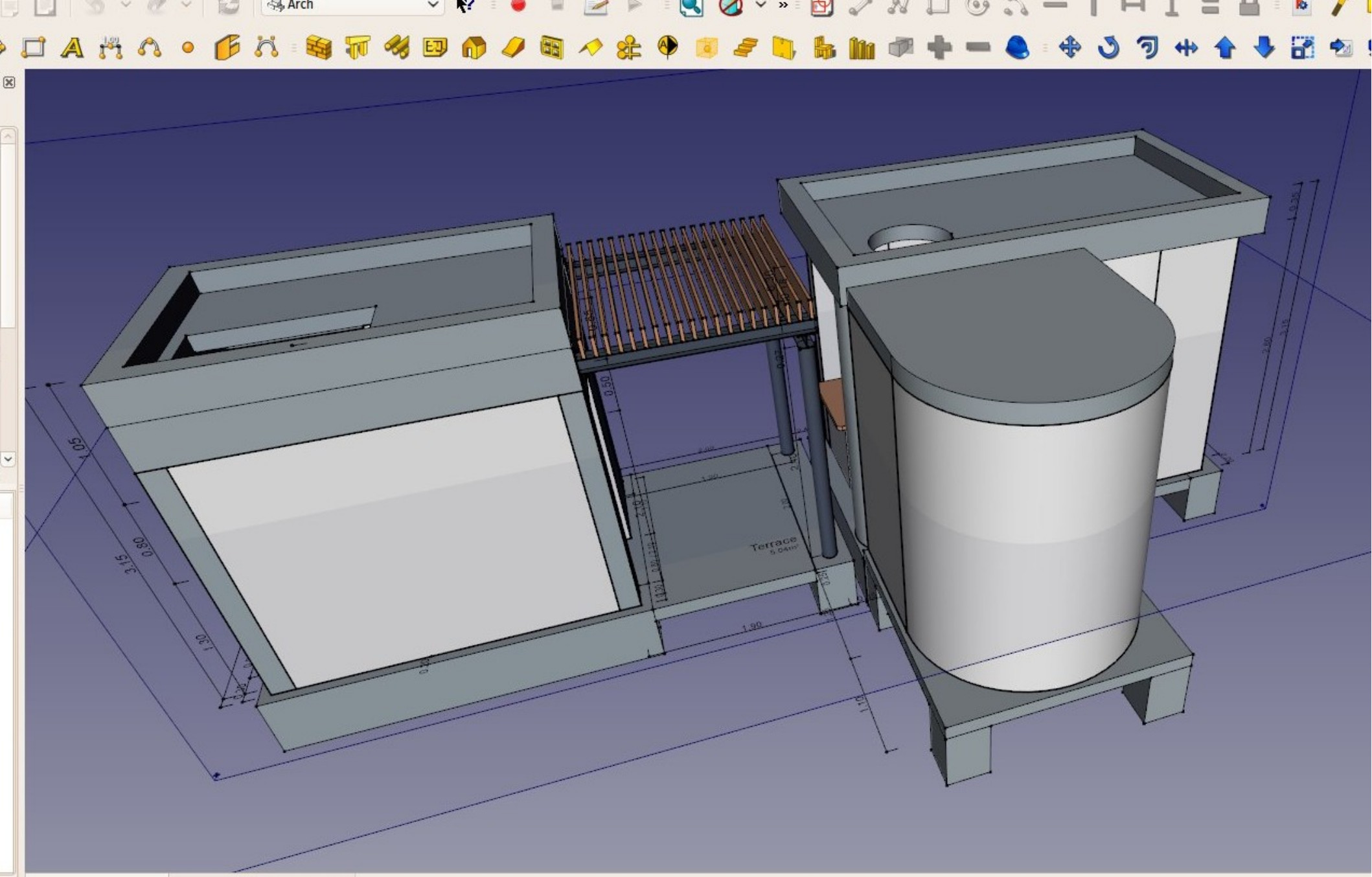


Report view

```
Active document is Unnamed (at 0x47ea180)
Active view is Unnamed : 1[*] (at 0x47ec120)
Sel : Clear selection
No active document
Active view is Unnamed : 1[*] (at 0x638a580)
```

Python console

```
Type 'help', 'copyright', 'credits' or 'license' for more information.
>>> App.setActiveDocument("Unnamed")
>>> App.ActiveDocument=App.getDocument("Unnamed")
>>> Gui.ActiveDocument=Gui.getDocument("Unnamed")
>>> App.closeDocument('Unnamed')
```

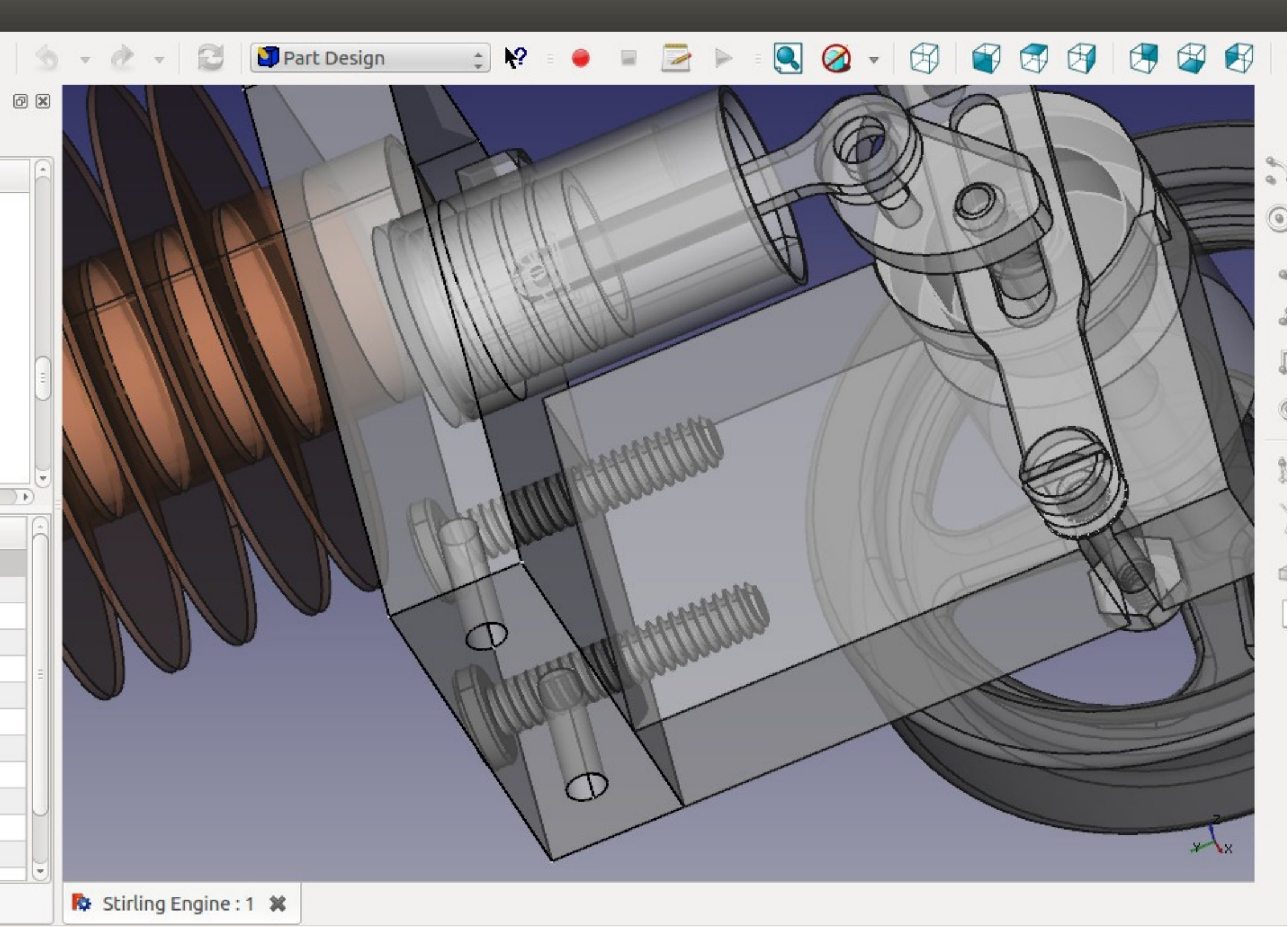
Part Design
Stirling Engine : 1
104.7

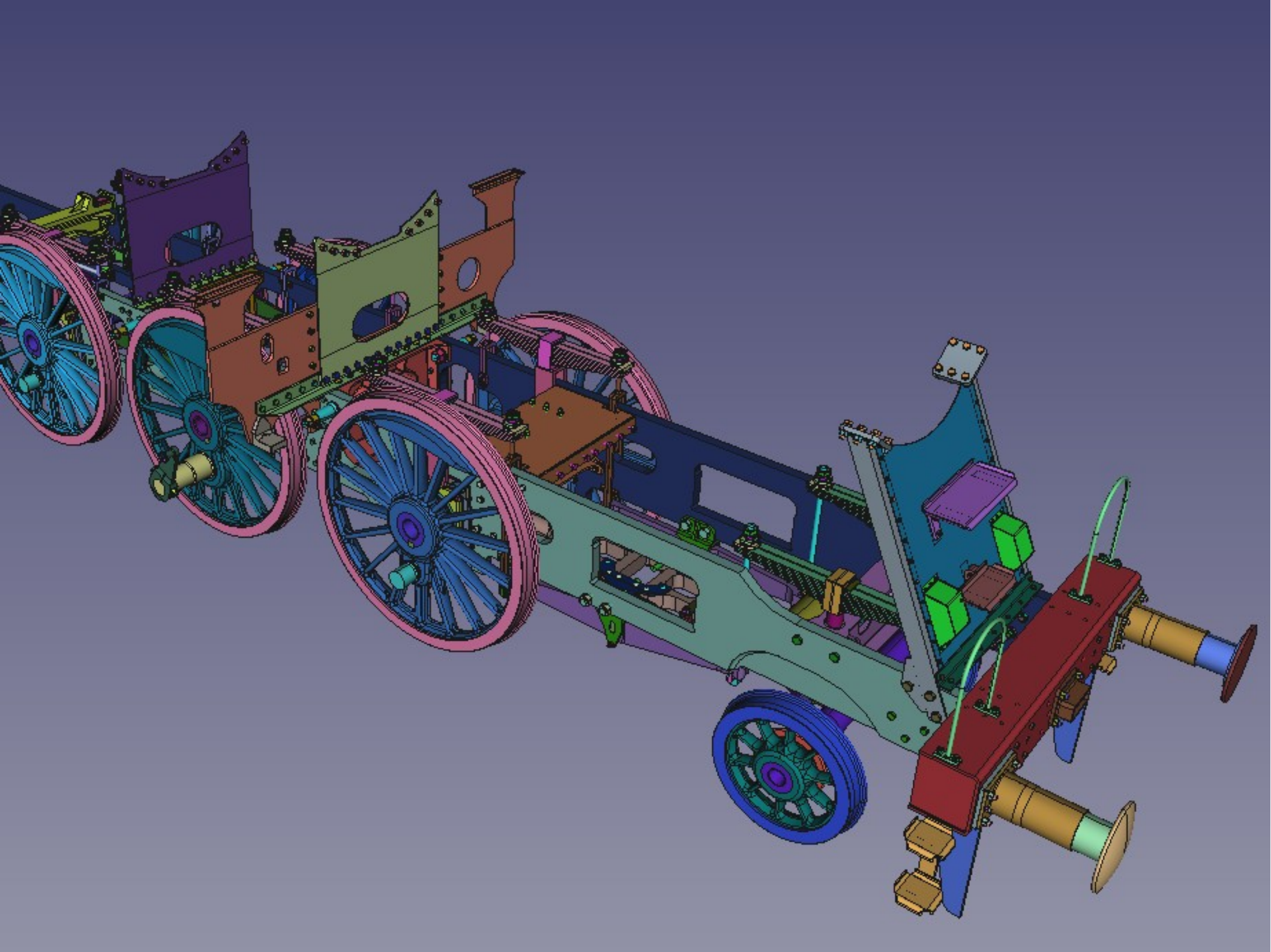

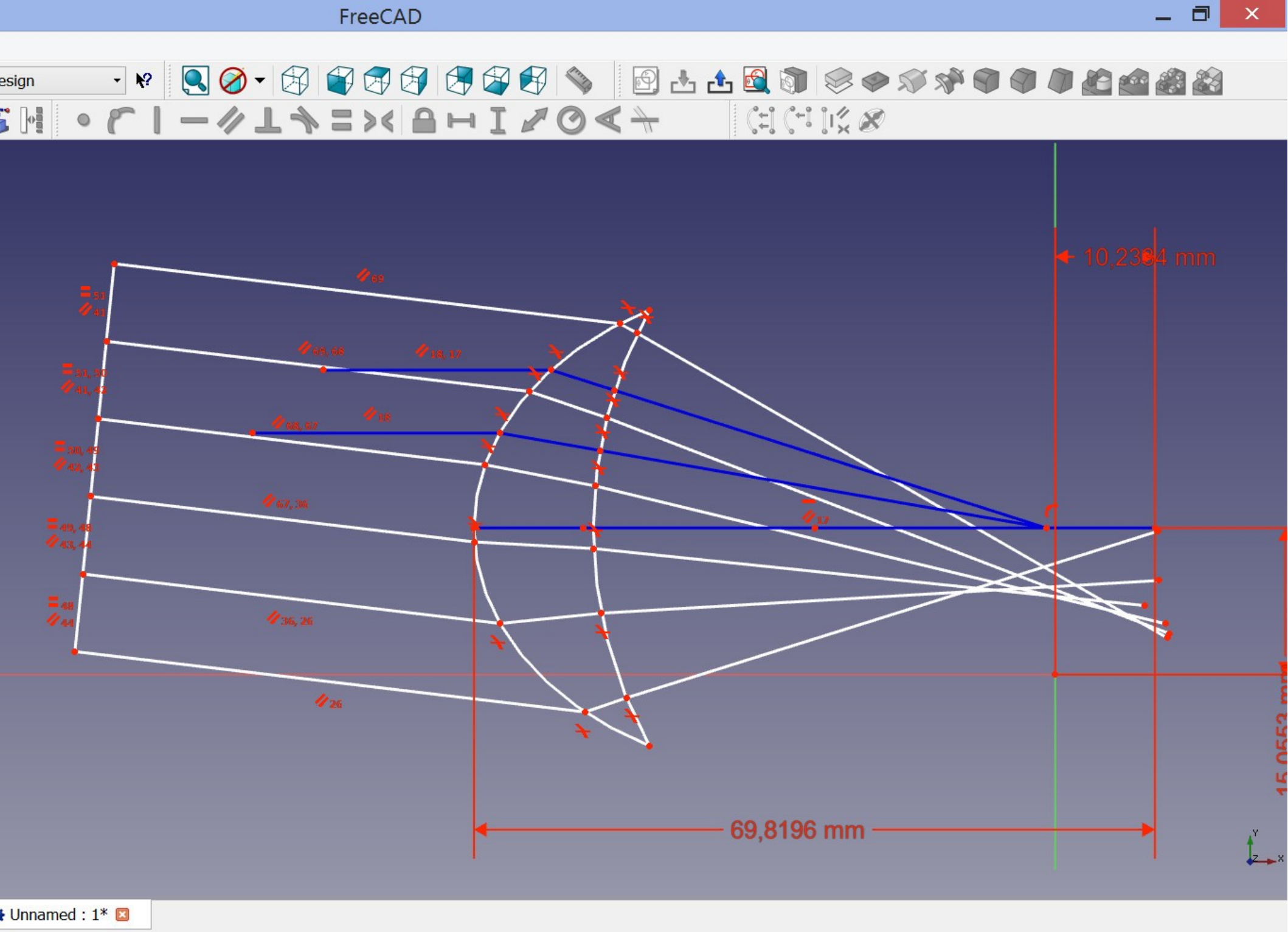
FreeCAD
10,2384 mm
69,8196 mm
Unnamed : 1*
135.50 x 78.02 mm

Combo-Ansicht

Model | Aufgaben

Bezeichnungen & Eigenschaften

Applikation

- **Unnamed**
  - Quader
  - MechanicalAnalysis
    - Box_Mesh
    - FemConstraintForce
    - FemConstraintFixed
    - MechanicalMaterial
    - Displacement
    - **MisesStress**

| Eigenschaft | Wert |
|---|---|
| **Base** | |
| Display Mode | |
| Visibility | false |

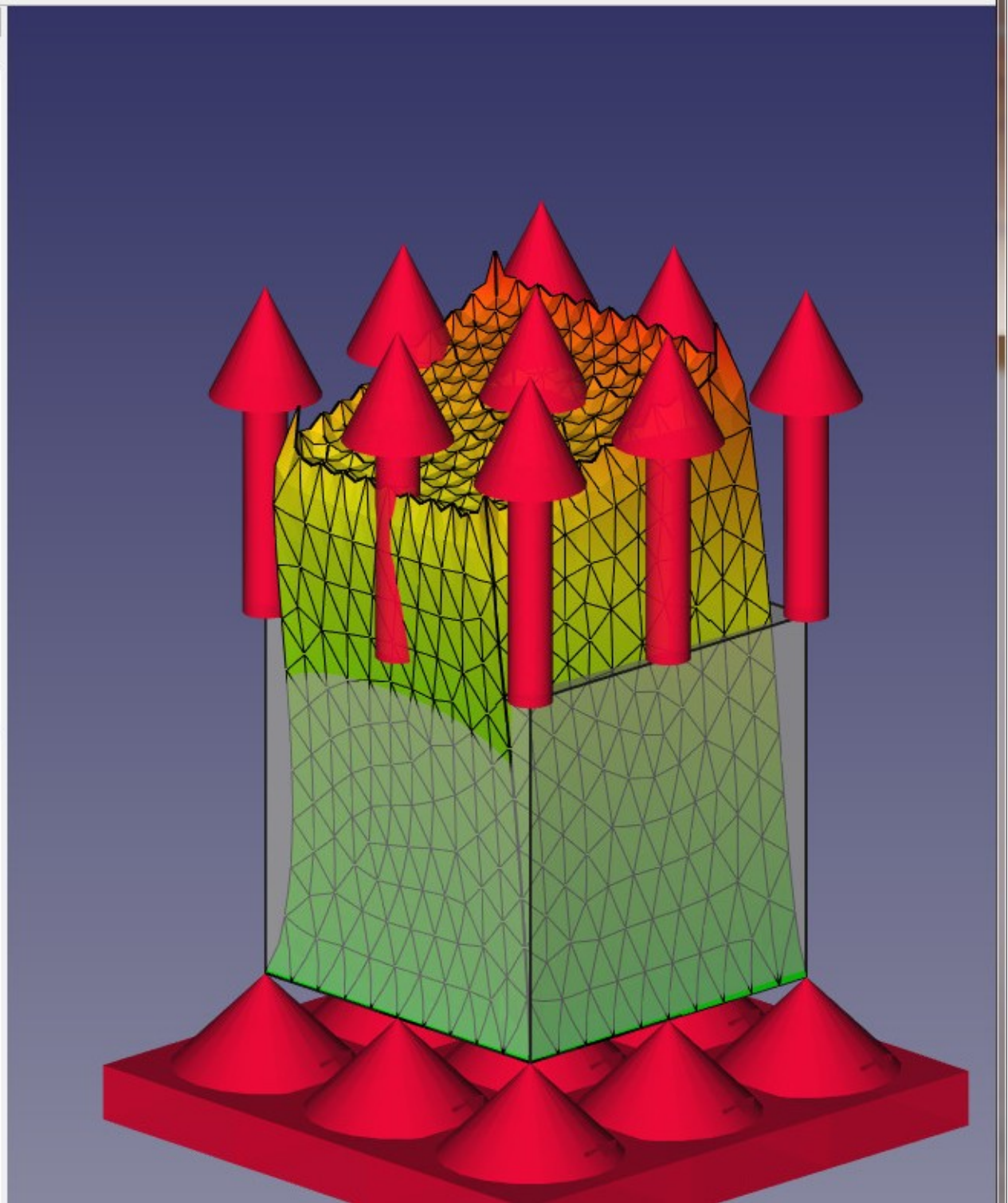

# Modularity

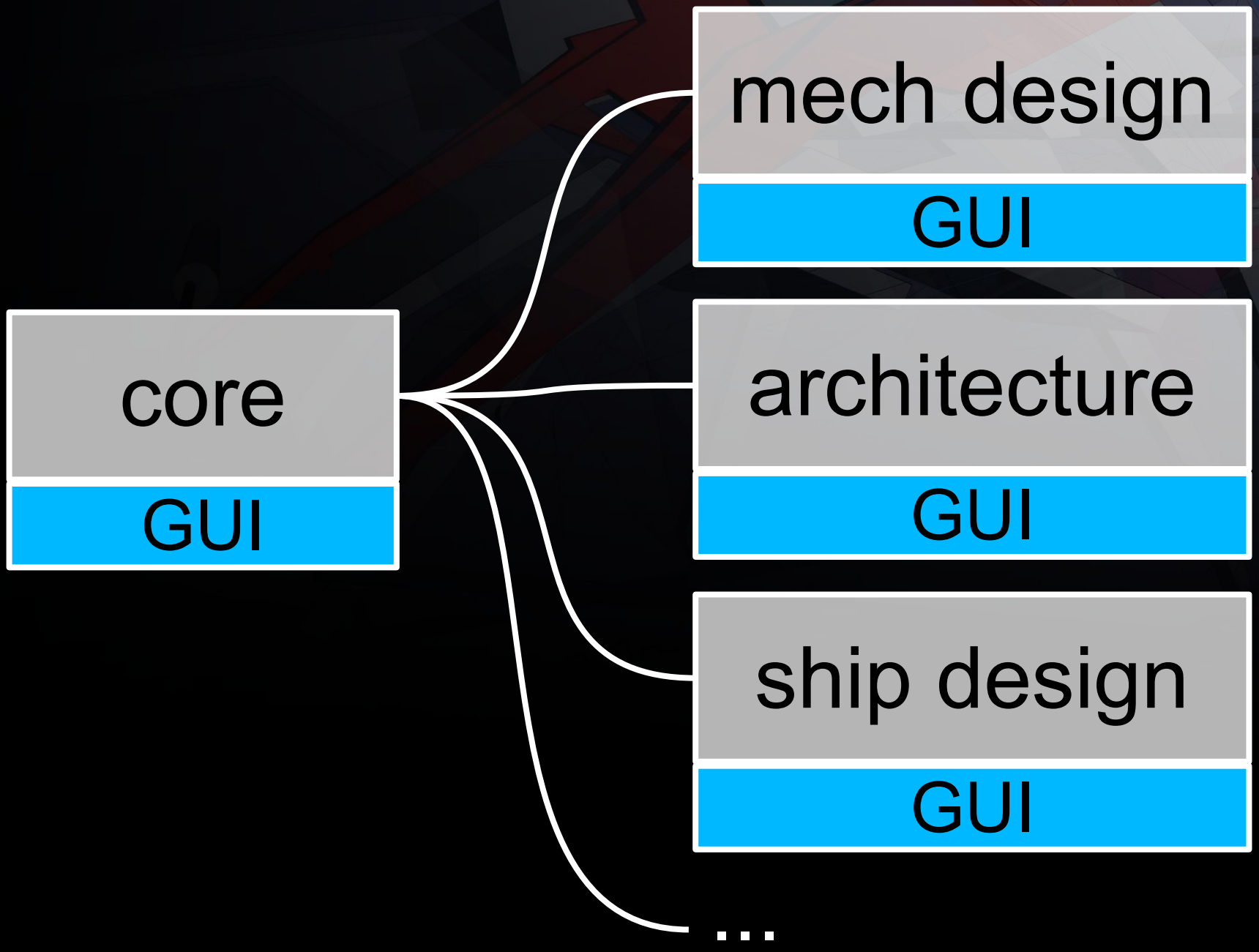

# Multi paradigm

- Core provides only a container for modules and a 3D viewer
- The type of objects that can be contained in a FreeCAD document are defined in modules
- Any kind of stuff can coexist in a same document

# Heavy dependencies

- Qt (interface)
- Python (scripting & more)
- OpenCasCade (geometry kernel)
- OpenInventor/Coin3D (3D display)

- Many more, each module has its own: KDL, IfcOpenShell, matplotlib, openSCAD, etc...

# Python everywhere

- The “glue” between “core” and GUI
- Some modules fully written in python
- The user can access just anything, and therefore gain the powers of a ~~GOD~~ full C++ developer
- Learn while doing

FreeCAD

File Edit View Tools Macro Architecture Draft Windows Help

Arch

Combo View

Model Tasks

Labels & Attributes

Application

Unnamed

Property Value

View Data

Unnamed : 1

Selection view

Search

Report view

```
/home/yorik/Apps/FreeCAD/
Mod/Path... done
Init:      Initializing
/home/yorik/.FreeCAD/Mod/
Arch... done
Init:      Initializing
/home/yorik/.FreeCAD/Mod/
```

Python console

```
>>> App.setActiveDocument("Unnamed")
>>> App.ActiveDocument=App.getDocument("Unnamed")
>>> Gui.ActiveDocument=Gui.getDocument("Unnamed")
>>> Gui.SendMsgToActiveView("ViewFit")
>>> |
```

8.54 x 4.1

View Tools Macro Architecture Draft Windows Help

Arch

utes

d

| | Value |
|---|---|
| | |
| | 0 |
| | 2 m |
| | 0 mm |
| .. | false |
| | [0.00 0.00 0.00] |

Unnamed : 1*

Report view

dge11 (Wall)

```
Sel : Clear selection
Sel : Clear selection
Sel : Add Selection
"Unnamed.Wall.Edge11(2000
.000000,-30.972521,0.0000
00)"
```

Python console

```
>>> import Part
>>> trace=Part.Line(FreeCAD.Vector (0.0, 0.0, 0.0),FreeCAD.Vector 20
>>> base=FreeCAD.ActiveDocument.addObject("Sketcher::SketchObject" "W
>>> base.addGeometry(trace)
>>> Arch.makeWall(base,width=200.0,height=2000.0,align="Center")
>>>
```

5.93 x 2.76 m

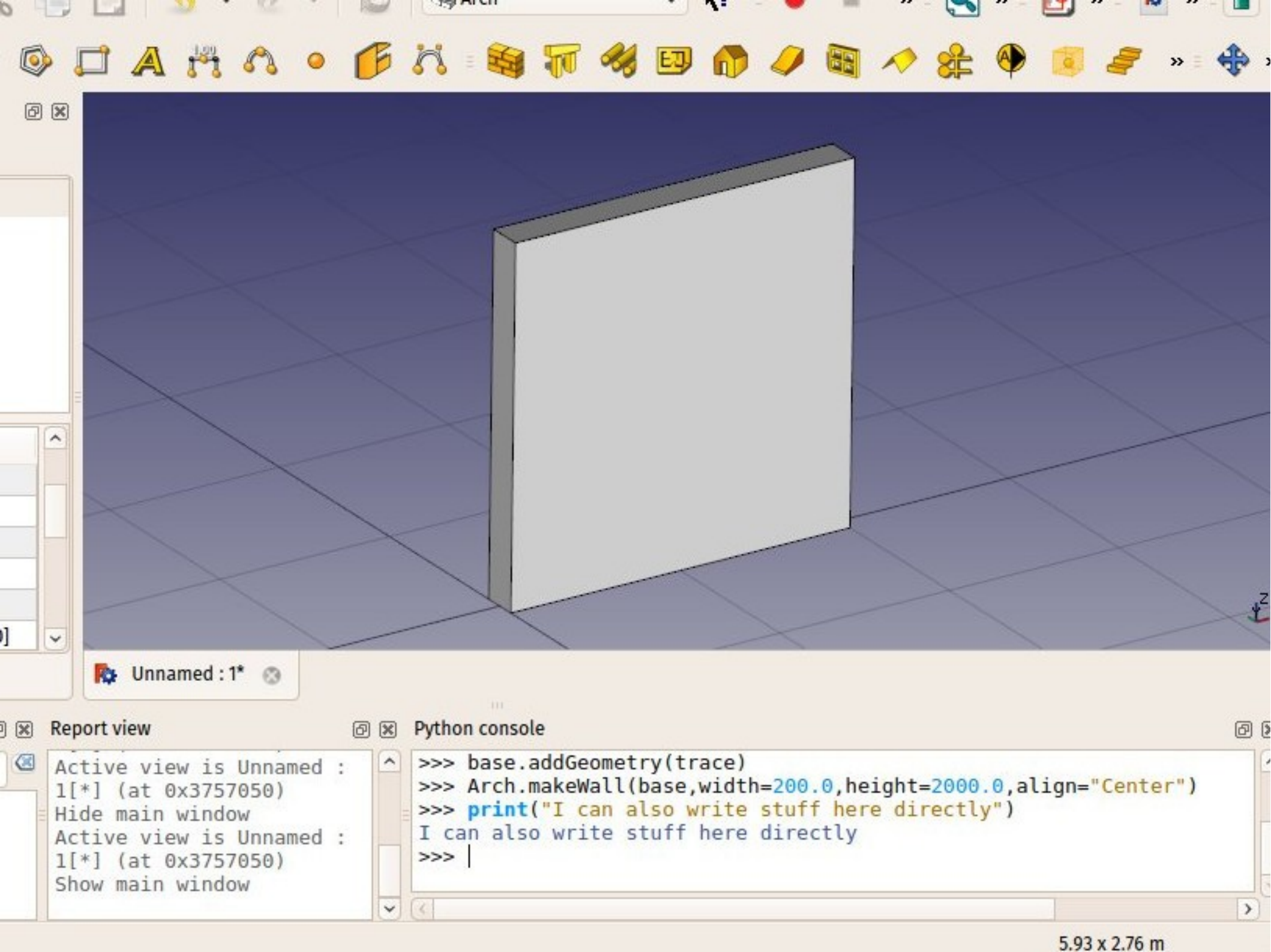
Unnamed : 1*
Report view
Active view is Unnamed : 1[*] (at 0x3757050)
Hide main window
Active view is Unnamed : 1[*] (at 0x3757050)
Show main window
Python console
>>> base.addGeometry(trace)
>>> Arch.makeWall(base,width=200.0,height=2000.0,align="Center")
>>> print("I can also write stuff here directly")
I can also write stuff here directly
>>>
5.93 x 2.76 m

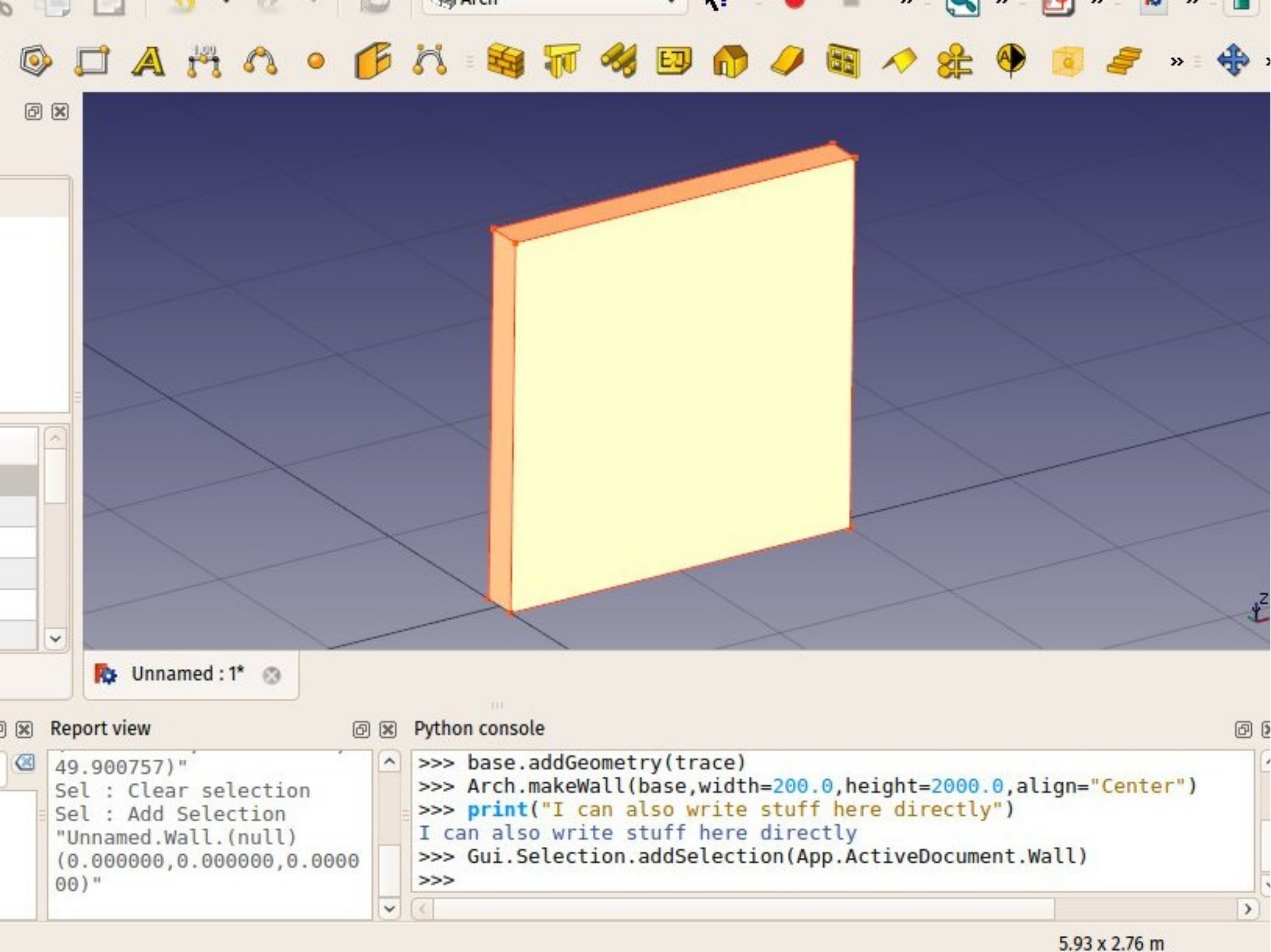
Unnamed : 1*
Report view
49.900757)"
Sel : Clear selection
Sel : Add Selection
"Unnamed.Wall.(null)
(0.000000,0.000000,0.0000
00)"
Python console
>>> base.addGeometry(trace)
>>> Arch.makeWall(base,width=200.0,height=2000.0,align="Center")
>>> print("I can also write stuff here directly")
I can also write stuff here directly
>>> Gui.Selection.addSelection(App.ActiveDocument.Wall)
>>>
5.93 x 2.76 m

Tools Macro Architecture Draft Windows Help

Arch

Value

Center

WallTrace

Unnamed : 1*

Report view

```
Active view is Unnamed :
1[*] (at 0x3757050)
Show main window
Active view is Unnamed :
1[*] (at 0x3757050)
Active view is Unnamed :
1[*] (at 0x3757050)
Active view is Unnamed :
1[*] (at 0x3757050)
Hide main window
Active view is Unnamed :
1[*] (at 0x3757050)
Show main window
Active view is Unnamed :
1[*] (at 0x3757050)
```

Python console

```
>>> poin
>>> Draf
>>> App.
>>> impo
>>> impo
>>> trac
>>> base
>>> base
>>> Arch
>>> prin
I can al
>>> Gui.
>>> Gui.
```

__doc__
__name__
__package__
activateWorkbench
activeDocument
activeWorkbench
addCommand

activeDocument() -> object or None

Return the active document or None if no one exists

```
reeCAD.Vector(1000.0,1000.0,0.
ce=True,support=None)
ct("Line")

0.0, 0.0),FreeCAD.Vector (2000
("Sketcher::SketchObject","Wal

=2000.0,align="Center")
```

8.45 x 2.76 m

Macro Architecture Draft Windows Help

Arch

Opens a dialog to record a macro

Unnamed : 1*

Report view

```
Hide main window
Active view is Unnamed :
1[*] (at 0x3757050)
Show main window
Active view is Unnamed :
1[*] (at 0x3757050)
Hide main window
Active view is Unnamed :
1[*] (at 0x3757050)
Show main window
Active view is Unnamed :
1[*] (at 0x3757050)
Active view is Unnamed :
1[*] (at 0x3757050)
```

Python console

```
>>> points=[FreeCAD.Vector(0.0,0.0,0.0),FreeCAD.Vector(1000.0,1000.0,0.0)]
>>> Draft.makeWire(points,closed=False,face=True,support=None)
>>> App.getDocument("Unnamed").removeObject("Line")
>>> import Arch
>>> import Part
>>> trace=Part.Line(FreeCAD.Vector (0.0, 0.0, 0.0),FreeCAD.Vector (2000.0, 0
>>> base=FreeCAD.ActiveDocument.addObject("Sketcher::SketchObject","WallTrac
>>> base.addGeometry(trace)
>>> Arch.makeWall(base,width=200.0,height=2000.0,align="Center")
>>> print("I can also write stuff here directly")
I can also write stuff here directly
>>> Gui.Selection.addSelection(App.ActiveDocument.Wall)
>>>
```

acro

9.21 x 2.76 m

View Tools Macro Architecture Draft Windows Help

Arch

Macro recording

**Macro name:**

house-o-matic

**Macro path:**

/home/yorik/.FreeCAD/ ...

Record Stop Cancel

Value

Unnamed : 1*

Report view

```
Show main window
Active view is Unnamed :
1[*] (at 0x3757050)
Sel : Clear selection
Sel : Rmv Selection
"Unnamed.Wall.(null)"
```

Python console

```
I can also write stuff here directly
>>> Gui.Selection.addSelection(App.ActiveDocument.Wall)
>>> App.getDocument("Unnamed").removeObject("Wall")
>>> App.getDocument("Unnamed").removeObject("WallTrace")
>>> Gui.activeDocument().activeView().viewTop()
>>>
```

10.24 x 4.54 m

FreeCAD

File Edit View Tools Macro Draft Windows Help

Draft

Auto 1px 20.00

Combo View

Model Tasks

Close

Line

Local X -0.00 mm

Local Y -0.00 mm

Local Z -0.00 mm

Relative

Continue

Undo

Unnamed : 1*

Selection view

Search

Unnamed.DWire.Edge1 (DWire)

Report view

```
Sel : Clear selection
Sel : Add Selection
"Unnamed.DWire.Edge1(0.00000
0,0.000118,1976.814819)"
```

Python console

```
>>> App.getDocument("Unnamed").removeObject("Extrude")
>>> App.getDocument("Unnamed").removeObject("Extrude001")
>>> Gui.getDocument("Unnamed").getObject("DWire").Visibili
>>> Gui.activeDocument().activeView().viewFront()
>>> Gui.activateWorkbench("DraftWorkbench")
>>>
```

FreeCAD

File Edit View Tools Macro Part Measure Windows Help

Part

Combo View

Model Tasks

Apply Close OK

Extrude

Direction

X: 0.00

Y: 0.00

Z: 1.00

Length: 3000.00

Along normal

Note:This option works for planes only

Create solid

Unnamed : 1*

Selection view

Search

Unnamed.Extrude (Extrude)

Report view

```
1[*] (at 0x3757050)
Sel : Clear selection
Sel : Add Selection
"Unnamed.DWire.Face1(1319.80
3467,0.000072,1208.478760)"
```

Python console

```
>>>
>>> Gui.ActiveDocument.Extrude001.ShapeColor=Gui.ActiveDocum
>>> Gui.ActiveDocument.Extrude001.LineColor=Gui.ActiveDocume
>>> Gui.ActiveDocument.Extrude001.PointColor=Gui.ActiveDocum
>>> Gui.getDocument("Unnamed").getObject("Extrude").Visibili
>>>
```

ools Macro Part Measure Windows Help

Part

```
# Macro Begin: /home/yorik/.FreeCAD/house-o-matic.FCMacro ++++++++++++++++++++++++++++++++++++++++++++++++++++
import FreeCAD
import Part

#Gui.activeDocument().activeView().viewFront()
points=[FreeCAD.Vector(0.0,0.0,0.0),FreeCAD.Vector(0.0,0.000119209296656,2000.0),FreeCAD.Vector(1000.0,0.
Draft.makeWire(points,closed=True,face=True,support=None)
#Gui.activateWorkbench("PartWorkbench")
FreeCAD.getDocument("Unnamed").addObject("Part::Extrusion","Extrude")
FreeCAD.getDocument("Unnamed").Extrude.Base = FreeCAD.getDocument("Unnamed").DWire
FreeCAD.getDocument("Unnamed").Extrude.Dir = (0,-3000,0)
FreeCAD.getDocument("Unnamed").Extrude.Solid = (False)
FreeCAD.getDocument("Unnamed").Extrude.TaperAngle = (0)
FreeCADGui.getDocument("Unnamed").DWire.Visibility = False
FreeCAD.getDocument("Unnamed").Extrude.Label = 'Extrude'

#Gui.ActiveDocument.Extrude.ShapeColor=Gui.ActiveDocument.DWire.ShapeColor
#Gui.ActiveDocument.Extrude.LineColor=Gui.ActiveDocument.DWire.LineColor
#Gui.ActiveDocument.Extrude.PointColor=Gui.ActiveDocument.DWire.PointColor

# Macro End: /home/yorik/.FreeCAD/house-o-matic.FCMacro ++++++++++++++++++++++++++++++++++++++++++++++++++++
```

Unnamed : 1* | /home/yorik/.FreeCAD/house-o-matic.FCMacro* - Editor

Report view

```
(at 0x5562bb0)
Show main window
Active view is
/home/yorik/.FreeCAD/house-
o-matic.FCMacro[*] - Editor
(at 0x5562bb0)
```

Python console

```
>>> Gui.ActiveDocument.Extrude001.LineColor=Gui.ActiveDocument.DWire.LineCol
>>> Gui.ActiveDocument.Extrude001.PointColor=Gui.ActiveDocument.DWire.Point(
>>> Gui.getDocument("Unnamed").getObject("Extrude").Visibility=False
>>> import FreeCADGui
>>> FreeCADGui.open(u"/home/yorik/.FreeCAD/house-o-matic.FCMacro")
>>>
```

6.06 x 4.54 m

FreeCAD

File Edit View Tools Macro Windows Help

Custom

Combo View

Model Tasks

Labels & Attributes

Application

- Unnamed
  - DWire001
  - Extrude002
  - Extrude001001
  - Extrude
  - Extrude001

| Property | Value |
|---|---|
| 2 D | |
| Base | |
| Placement | [(0.00 0.00 1.00)... |
| Label | DWire001 |
| Draft | |
| Base | |
| Chamfer Size | 0 mm |

View Data

Selection view

Search

Unnamed.DWire001 (DWire001)

Report

```
Activ
1[*]
Activ
1[*] (at 0x3757050)
Active view is Unnamed :
1[*] (at 0x3757050)
```

```
>>> FreeCADGui.open(u"/home/yorik/.FreeCAD/house-o-matic.FC
>>> Gui.activateWorkbench("MyWorkbench")
>>>
```

Customize

Commands | Keyboard | Toolbars | Macros | Spaceball Motion | Spaceball Buttons

**Setup Custom Macros**

- Parts Library
- BOLTS
- Compound from ...
- Clean splitter
- Rebuild Arch sha...
- House-O-Matic

Macro: house-o-matic.FCMacro

Menu text: House-O-Matic

Tool tip: A fantastic tool for architects

Status text:

What's this:

Accelerator: Ctrl+H

Pixmap ...

Add Remove Replace

Help Close

Recording?

wait... that means...

A fatal exception 0E has occurred at 0028:C00069F8 in VxD VMM(01) + 000059F8. The current application will be terminated.

* Press any key to terminate the current application.
* Press CTRL+ALT+DEL to restart your computer. You will lose any unsaved information in all applications.

Press any key to continue _

Your work can be replayed

Separation between “core” and GUI?

wait... that means...

Yes.

```
>>> import FreeCAD
```

- FreeCAD runs fully without the GUI
- It is embeddable in other apps with one line of code
- All its modules still work (without their GUI too)
- It can then act as a (web) server
- It could have other GUIs

GNU Image Manipulation Program

File Edit Select View Image Layer Colours Tools Filters contributed FX-Foundry Script-Fu Video Windows Help

Python Console

```
GIMP 2.8.14 Python Console
Python 2.7.8 (default, Oct 18 2014, 12:50:18)
[GCC 4.9.1]
>>> import sys
>>> sys.path.append("/home/yorik/Apps/FreeCAD/lib")
>>> import FreeCAD
>>> doc = FreeCAD.newDocument()
>>> doc
<Document object at 0x1d465a0>
>>> import Part
>>> myLine = Part.makeLine( (0,0,0), (2,3,0) )
>>> myLine
<Edge object at 0x1d5a5c0>
>>> myLine.Curve
<Line (0,0,0) (2,3,0) >
>>>
```

Help Save Clear Browse... Close

Tool Options

Blend

Mode: Normal

Opacity

Gradient

FG to BG (RGB)

Shape: Linear

Repeat: None

Offset

Dithering

Adaptive supersampling

Mode: Normal

Opacity 100.0

Lock:

4.4 Map Display: 1 - Location: newLocation

2D view

GRASS GIS 6.4.4 Layer Manager

File Settings Raster Vector Imagery Volumes Database Help

```
Python 2.7.8 (default, Oct 18 2014, 12:50:18)
[GCC 4.9.1] on linux2
Type "help", "copyright", "credits" or "license" for
more information.
>>> import sys
>>> sys.path.append("/home/yorik/Apps/FreeCAD/lib")
None
>>> import FreeCAD
>>> dir(FreeCAD)
['ActiveDocument', 'Axis', 'Base', 'BoundBox',
'ConfigDump', 'ConfigGet', 'ConfigSet', 'Console',
'EndingAdd', 'EndingGet', 'GuiUp', 'Matrix', 'ParamGet',
 'Placement', 'Rotation', 'Units', 'Vector', 'Version',
'__doc__', '__file__', '__name__', '__package__',
'__path__', 'activeDocument', 'addDocumentObserver',
'addExportType', 'addImportType', 'closeDocument',
'getDocument', 'getExportType', 'getHomePath',
'getImportType', 'getResourceDir', 'listDocuments',
'loadFile', 'newDocument', 'open', 'openDocument',
'removeDocumentObserver', 'setActiveDocument']
>>> myDoc = FreeCAD.newDocument("MyDocument")
>>> myDoc
<Document object at 0x326beb0>
>>> |
```

Clear

Map layers | Command console | Search module | **Python shell**

Coordinates

Render

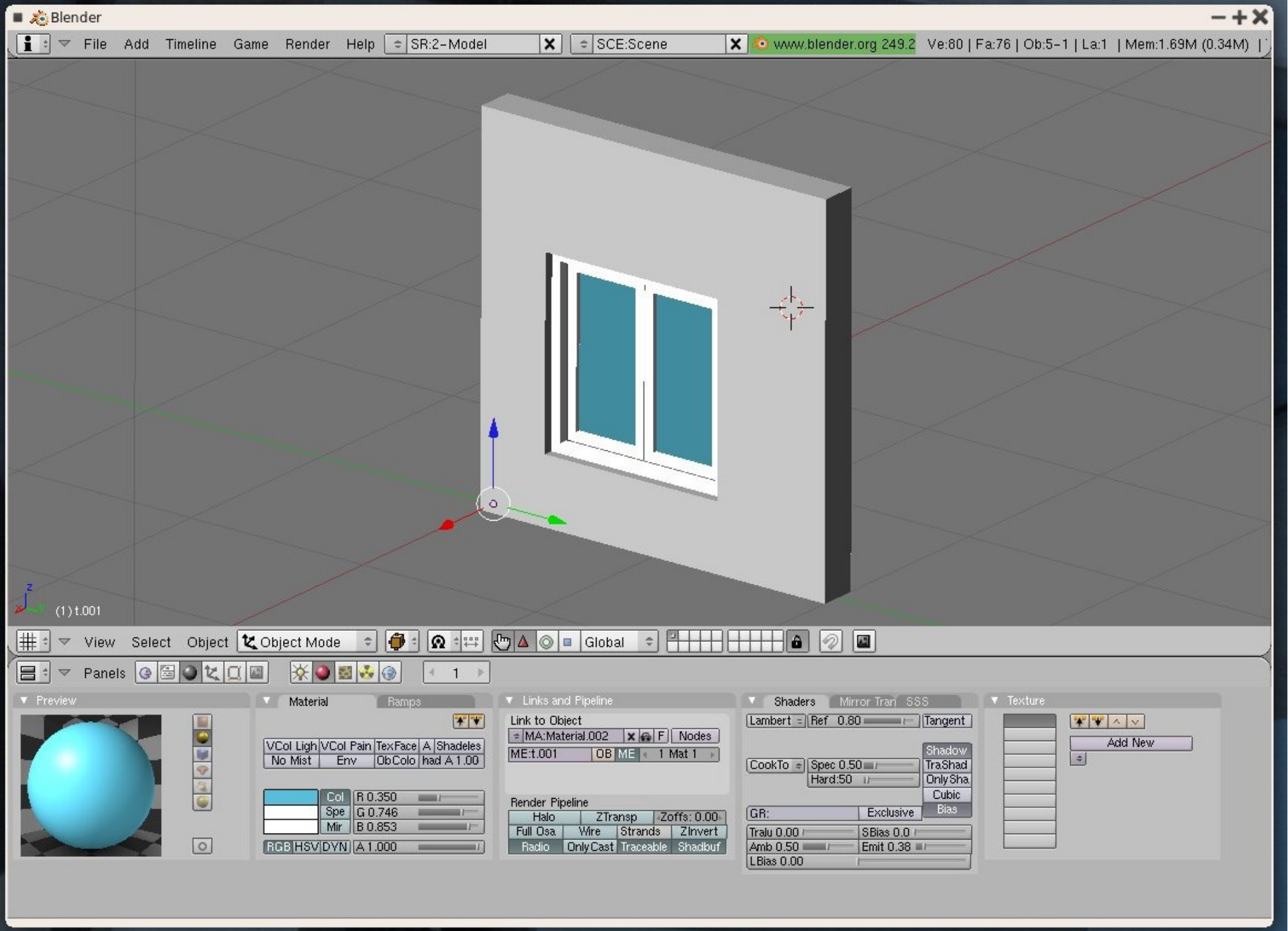
Blender
File
Add
Timeline
Game
Render
Help
SR:2-Model
SCE:Scene
www.blender.org 249.2
Ve:80 | Fa:76 | Ob:5-1 | La:1 | Mem:1.69M (0.34M)
(1) t.001
View
Select
Object
Object Mode
Global
Panels
1
Preview
Material
Ramps
VCol Ligh
VCol Pain
TexFace
A
Shadeless
No Mist
Env
ObColo
had A 1.00
Col
Spe
Mir
R 0.350
G 0.746
B 0.853
RGB
HSV
DYN
A 1.000
Links and Pipeline
Link to Object
MA:Material.002
F
Nodes
ME:t.001
OB
ME
1 Mat 1
Render Pipeline
Halo
ZTransp
Zoffs: 0.00
Full Osa
Wire
Strands
ZInvert
Radio
OnlyCast
Traceable
Shadbuf
Shaders
Mirror Tran
SSS
Lambert
Ref 0.80
Tangent
Shadow
TraShad
OnlySha
Cubic
Bias
CookTo
Spec 0.50
Hard:50
GR:
Exclusive
Tralu 0.00
SBias 0.0
Amb 0.50
Emit 0.38
LBias 0.00
Texture
Add New

# The web!

- Web applications that use FreeCAD in the background
- WebGL interfaces for FreeCAD
- Anything that has not yet been imagined

# Why python, after all?

- Powerful C API, very easy to embed and make dialog with the C++ core
- Almost every lib has python bindings nowadays
- The open-source community is fond of it, easy adoption

# Useful apps that use python

opensource

- Blender: yes
- Inkscape: yes
- OpenSCAM: yes
- GRASS: yes
- Salome: yes
- OpenSCAD: yes

...

proprietary

- Autocad: yes
- SolidWorks: no
- Catia: yes
- Rhino: yes
- SolidEdge: yes
- Revit: yes

...

# Why would users want it?

- Making objects in real-life already involves a lot of tinkering
- Technical and precise 3D modeling quickly becomes very complex (lots of ways to do things)
- Paradigms evolve constantly

Now for some serious stuff...

# Access the geometry kernel

via FreeCAD's own API

```
>>> import Part

>>> l = Part.makeLine((0,0,0),(2,2,0))
>>> Part.show(l)

>>> c = Part.makeBox(2,2,2)
>>> Part.show(c)
```

# Access the geometry kernel

directly

```
>>> import OCC
>>> from OCC.BRepPrimAPI import
                        BrepPrimAPI_MakeBox

>>> c = BrepPrimAPI_MakeBox(10,20,
                              30).Shape()

>>> p = Part.__fromPythonOCC__(c)
>>> Part.show(p)
```

# Data Structure Index

# Access the interface

via Qt's own python libs

```
>>> from PySide import QtGui, QtCore
>>> mw = FreeCADGui.getMainWindow()
>>> d = QtGui.QDockWidget()
>>> d.setWidget(QtGui.QCalendarWidget())
>>> mw.addDockWidget(d)
```

FreeCAD

File Edit View Tools Macro Architecture Draft Windows Help

Arch

Auto

Combo View

Model Tasks

Labels & Attributes

Application

Unnamed

| Property | Value |
|---|---|

View Data

Unnamed : 1

January 2015

| | Sun | Mon | Tue | Wed | Thu | Fri | Sat |
|---|---|---|---|---|---|---|---|
| 1 | 28 | 29 | 30 | 31 | 1 | 2 | 3 |
| 2 | 4 | 5 | 6 | 7 | 8 | 9 | 10 |
| 3 | 11 | 12 | 13 | 14 | 15 | 16 | 17 |
| 4 | 18 | 19 | 20 | 21 | 22 | 23 | 24 |
| 5 | 25 | 26 | 27 | 28 | 29 | 30 | 31 |
| 6 | 1 | 2 | 3 | 4 | 5 | 6 | 7 |

Selection view

Search

Report view

```
Hide main window
Active view is Unnamed : 1[*] (at
0x4a3d210)
Show main window
Hide main window
Active view is Unnamed : 1[*] (at
0x4a3d210)
Show main window
Hide main window
```

Python console

```
>>> q=QtGui.QDockWidget(cal)
>>> mw.addDockWidget(QtCore.Qt.RightDockWidgetArea,q)
>>> q=QtGui.QDockWidget()
>>> q.setWidget(cal)
>>> mw.addDockWidget(QtCore.Qt.RightDockWidgetArea,q)
>>>
```

5.28 x 4.14 mm

FreeCAD

File Edit View Tools Macro Architecture Draft Windows Help

Arch

Auto

Combo View

Model Tasks

Labels & Attributes

Application

Unnamed

| Property | Value |
|---|---|

View Data

Unnamed : 1

Standard Parts Selector

| Name | Description |
|---|---|
| Collections | Ordered by collecti... |
| I-Beam profiles (... | various rolled i-be... |
| DIN1025-3 | HEA profile, metric... |
| ibeam_heaa | HEAA profile, metri... |
| DIN1025-2 | HEB profile, metric... |
| DIN1025-4 | HEM profile, metric... |
| DIN1025-5 | IPE profile, metric ... |
| EN19-57 | IPE profile, metric ... |
| ibeam_ipe750 | IPE 750 profile, me... |
| ibeam_ipea | IPEa profile, metric... |
| ibeam_ipeo | IPEo profile, metric... |

**Name:** DIN1025-5

**Description:** IPE profile, metric european standard i-beam profile

**Status:** active

type IPE200

l (mm) 3000

arch

Add part

Selection view

Search

Report view

```
0x4a3d210)
Show main window
Active view is Unnamed : 1[*] (at
0x4a3d210)
Active view is Unnamed : 1[*] (at
0x4a3d210)
```

Python console

```
>>> q=QtGui.QDockWidget(cal)
>>> mw.addDockWidget(QtCore.Qt.RightDockWidgetArea,q)
>>> q=QtGui.QDockWidget()
>>> q.setWidget(cal)
>>> mw.addDockWidget(QtCore.Qt.RightDockWidgetArea,q)
>>>
```

4.94 x 4.14 mm

# Access the OpenGL 3D view

via Coin3D's python lib

```
>>> from pivy import coin
>>> win = FreeCADGui.ActiveDocument.
                ActiveView.getSceneGraph()
>>> win.addChild(coin.SoCube())
```

FreeCAD

File Edit View Tools Macro Architecture Draft Windows Help

Arch

Auto

Combo View

Model Tasks

Labels & Attributes

Application

Unnamed

Property Value

View Data

Unnamed : 1

Selection view

Search

Report view

```
Active view is Unnamed : 1[*] (at
0x4a3d210)
Show main window
Active view is Unnamed : 1[*] (at
0x4a3d210)
Active view is Unnamed : 1[*] (at
0x4a3d210)
```

Python console

```
>>> q.setWidget(cal)
>>> mw.addDockWidget(QtCore.Qt.RightDockWidgetArea,q)
>>> from pivy import coin
>>> win = Gui.ActiveDocument.ActiveView.getSceneGraph()
>>> win.addChild(coin.SoCube())
>>>
```

9.06 x 4.14 mm

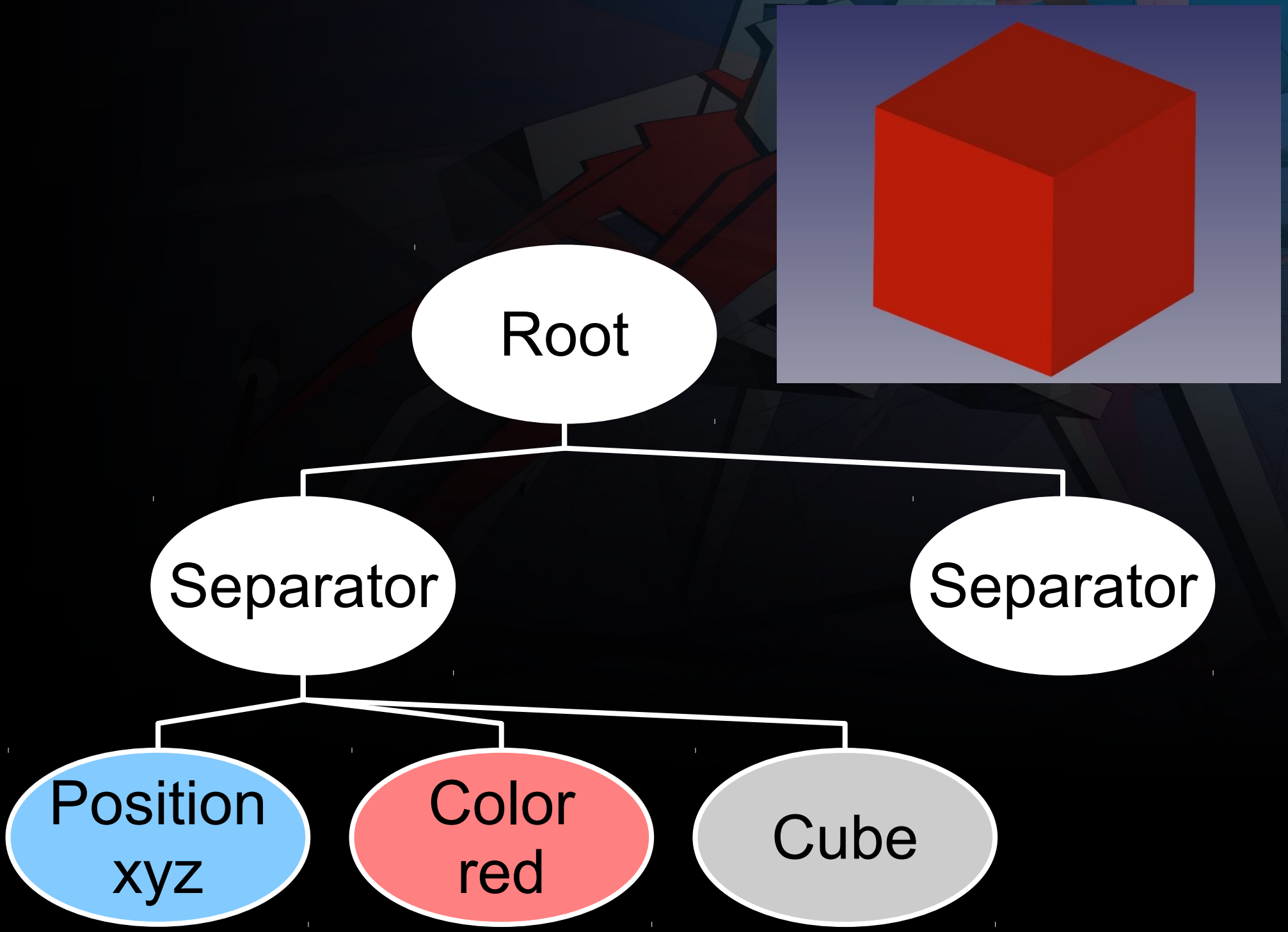
Root
Separator
Separator
Position
xyz
Color
red
Cube

FreeCAD

File Edit View Tools Macro Draft Windows Help

Draft

Auto 3px 20.00

Combo View

Model Tasks

Close

Line

Global X -10.00 m

Global Y -10.00 m

Global Z -0.00 mm

Length 14.14 m

Angle 135.00 deg

Relative

Continue

Undo

Unnamed : 1*

Selection view

Search

Report view

```
Pick first point:
Pick next point:
Sel : Clear selection
Active view is Unnamed : 1[*] (at
0x69885e0)
Active view is Unnamed : 1[*] (at
0x69885e0)
```

Python console

```
>>> FreeCADGui.getDocument("Unnamed").getObject("Rectangl
>>> pl=FreeCAD.Placement()
>>> pl.Rotation.Q=(0.0,-0.0,-0.0,1.0)
>>> pl.Base=FreeCAD.Vector(10000.0,10000.0,0.0)
>>> Draft.makeCircle(radius=5000.0,placement=pl,face=True
>>>
```

Preselected: Unnamed.Rectangle.Edge2 (20000.000000,869.318359,0.000000)

67.97 x

# The user can

- Quickly record a couple of actions
- Tweak it afterwards
- Create highly complex GUI elements
- Create the needed screen behaviour

Part

Vue combinée

Modèle | Tâches | Work Features

Origin | Point | Axis | Plane | Boxes

Object(s) Center

Line(s) Center

Line(s) Extrema

Circle(s) Center

Point along Line 0.0

Face(s) Center

Point=(Line,Face)

Point=(Line,Point)

Point=(Point,Face)

Object(s) Base Point

Vue rap... | Console Pyt... | Vue combi...

Start page | testForWorkfeatures : 1

Preselected: testForWorkfeatures.Face028.Face1 (-20.000000,3.975221,-8.973855)

# Typical learning path

- Start by recording some actions: my first macro!
- Publish it on the FreeCAD website
- Tweak it, add some salt
- Man, I need a dialog...

# FreeCAD forum

The help and development forum of FreeCAD

Search... Search
Advanced search
Search with google

Board index

User Control Panel (0 new messages) • View your posts

FAQ Members Logout [ yorik ]

It is currently Fri Jan 16, 2015 5:49 pm
[ Moderator Control Panel ]

Last visit was: Fri Jan 16, 2015 12:25 pm

View unanswered posts • View unread posts • View new posts • View active topics

Mark forums read

| USERS | TOPICS | POSTS | LAST POST |
|---|---|---|---|
| **Help on using FreeCAD**<br>Post here for help on using FreeCAD's graphical user interface (GUI). | 3085 | 26067 | by quick61<br>Fri Jan 16, 2015 5:34 pm |
| **Python scripting and macros**<br>Need help, or want to share a macro? Post here! | 455 | 2697 | by dekoning<br>Fri Jan 16, 2015 4:22 pm |
| **Install / Compile**<br>Having trouble installing or compiling FreeCAD? Get help here. | 753 | 6393 | by hobbes1069<br>Fri Jan 16, 2015 11:07 am |
| **Open discussion**<br>Have some feature requests, feedback, cool stuff to share, or want to know where FreeCAD is going? This is the place. | 1024 | 10369 | by DeepSOIC<br>Fri Jan 16, 2015 4:18 pm |
| **Feature Announcements**<br>Info about new implemented features, classes, modules or APIs. Might get technical! | 121 | 1616 | by hotspoons<br>Wed Jan 14, 2015 10:38 pm |
| **Users Showcase**<br>Show off your FreeCAD projects here! | 194 | 954 | by microelly2<br>Tue Jan 13, 2015 6:10 pm |

| DEVELOPMENT | TOPICS | POSTS | LAST POST |
|---|---|---|---|
| **Developers corner**<br>Here's the place for discussion related to coding in FreeCAD, C++ or Python. Design, interfaces and structures. | 1200 | 14664 | by yorik<br>Fri Jan 16, 2015 5:18 pm |
| **Pull Requests**<br>Post here if you have code to integrate into master. | 150 | 1102 | by yorik<br>Fri Jan 16, 2015 3:32 pm |
| **Part Design module development** | 62 | 678 | by ickby |

File Edit View Tools Macro Architecture Draft Windows He

<none>
Arch
Assembly
Assembly 2
Complete
Custom
Draft
Drawing
Drawing Dimensioning
Fem
Image
Inspection
Mesh design
OpenSCAD
Part
Part Design
Path
Plot
Points
Python sandbox
Raytracing
Reverse Engineering
Robot
Ship
Sketcher
Spreadsheet
Start
Test framework
Web

mbo View

Model Tasks

abels & Attributes

pplication

Unnamed

Property Value

View Data

Unnamed : 1

lection view

earch

Report view

```
Show main window
Toolbars restored
Init: Entering event loop
Init: Processing command line
Active view is Unnamed : 1[*] (at 0x2cec0f0)
Active document is Unnamed (at 0x2ce9dd0)
Active view is Unnamed : 1[*] (at 0x2cec0f0)
```

# The community usually

- Suffocates cool new users with help
- Guides through the complex world of technical 3D
- Provides a lot of feedback and testing
- Decides about anything

# The FreeCAD development

- No goals, no schedule, no law
- No release plan. No plan at all, actually
- No typical “user-to-developer” thing
- Most of the problems get solved directly on the forum

# And the developers?

- Just 3 people with write permission
- General knowledge of the whole app
- Very tight attention to the structure and the principles
- Promote FWD (FreeCAD World Domination)

FreeCAD

File Edit View Tools Macro Path Windows Help

Path

Combo View

Model Tasks

Labels & Attributes

Application

- Unnamed
  - Pad
  - Profile

| Property | Value |
|---|---|
| **Depth Parameters** | |
| Clearance Height | 15.00 |
| Final Depth | -1.00 |
| Retract Height | 0.00 |
| Start Depth | 9.00 |
| Step Down | 1.00 |
| Use Start Depth | false |
| **Path** | |
| Path Closed | true |
| **Profile Parameters** | |
| Direction | CW |
| End Point | [0.00 0.0 |
| Extend At End | 0.00 |
| Extend At Start | 0.00 |
| Horiz Feed | 0.00 |

View Data

Unnamed : 1*

Selection view

Search

Unnamed.Profile (Profile)

Report view

```
Loading PathCopy... done
Loading Path workbench... done
Path workbench activated
There are edges selected
Sel : Clear selection
Sel : Clear selection
Active view is Unnamed : 1[*] (at 0x3304db0)
```

Python console

```
>>> App.ActiveDocument.recompute()
>>> Gui.activeDocument().resetEdit()
>>> Gui.activateWorkbench("PathWorkbench")
>>> import PathScripts.PathProfile
>>> FreeCADGui.getDocument("Unnamed").getObject("Profile"
>>>
```

Preselected: Unnamed.Profile.Path (-62.184971,-20.999901,0.000000)

101.31 x 52.80 mm

FreeCAD

File Edit View Tools Macro Path Windows Help

Path

Combo View

Model Tasks

Labels & Attributes

- Pad001
- Fillet
- Vises
- PathProject
  - G54
  - Profile
  - G55
  - Profile_Copy

| Property | Value |
|---|---|
| **Base** | |
| Use Place... | false |
| Placement | [(0.00 0.00 1 |
| Label | PathProject |
| **Machine** | |
| Corner Min | [0.00 0.00 0. |
| Corner Max | [0.00 0.00 0. |
| Description | |
| Feed Rate | 0 mm/(s) |
| Spindle S... | 0 mm/(s) |

View Data

Combo View Tree view

FreeCAD

```
(Exported by FreeCAD)
(Post Processor: PathScripts.linuxcnc_post)
(Output Time:2015-01-17 11:29:20.786774)
(begin preamble)
G17 G21 G90
G54
(begin toolchange)
(A tool change)
(happens here)
M6T1
M3S2000.0000
G0X20.0000Y-224.8500
G1X20.0000Y-224.8500Z8.6000F75.00
G1X130.0000Y-224.8500Z8.6000F150.00
G3X151.3500Y-203.5000Z8.6000I0.0000J21.3500F150.00
G1X151.3500Y-20.0000Z8.6000F150.00
G3X130.0000Y1.3500Z8.6000I-21.3500J0.0000F150.00
G1X20.0000Y1.3500Z8.6000F150.00
G3X-1.3500Y-20.0000Z8.6000I0.0000J-21.3500F150.00
G1X-1.3500Y-203.5000Z8.6000F150.00
G3X20.0000Y-224.8500Z8.6000I21.3500J0.0000F150.00
G1X20.0000Y-224.8500Z6.6000F75.00
G1X130.0000Y-224.8500Z6.6000F150.00
G3X151.3500Y-203.5000Z6.6000I0.0000J21.3500F150.00
G1X151.3500Y-20.0000Z6.6000F150.00
G3X130.0000Y1.3500Z6.6000I-21.3500J0.0000F150.00
G1X20.0000Y1.3500Z6.6000F150.00
G3X-1.3500Y-20.0000Z6.6000I0.0000J-21.3500F150.00
G1X-1.3500Y-203.5000Z6.6000F150.00
G3X20.0000Y-224.8500Z6.6000I21.3500J0.0000F150.00
G1X20.0000Y-224.8500Z4.6000F75.00
G1X130.0000Y-224.8500Z4.6000F150.00
```

Cancel OK

543.01 x 307.91 mm

Menu Terminal FreeCAD 1 2 3 4 5 6 96% 11:35 AM

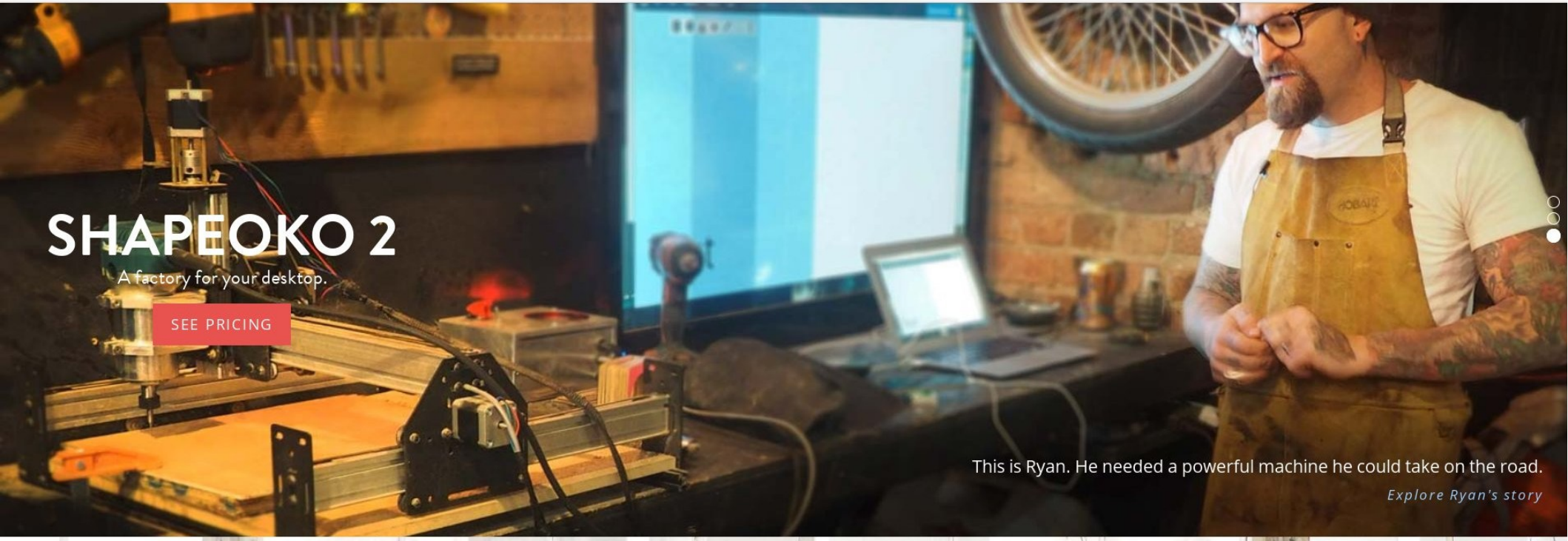


**Please note:** Kits ordered today are scheduled to ship within 12 business days.

## MECHANICAL KIT

Not for the faint of heart, this kit includes only the skeleton of the machine.

This is **recommended if you are an expert and your goal is to build a custom machine**. You'll need to supply your own electronics, pulleys, belts, and M3 hardware.

Kit contents $300

ADD TO CART

## FULL KIT

The Full Kit comes with with everything you need to get started with 3D carving, including tools and a milling bit.

After you assemble the Full Kit you will have a working bare-bones machine that can carve parts. This is **recommended for hobbyists who see building and upgrading the machine as part of the fun**.

Which voltage kit should I buy?

Kit contents

- 110V ( ) $650
- 220V ( ) $695

ADD TO CART

## THE WORKS

This package includes the Full Kit + a number of popular upgrades including a Quiet Cut spindle, a waste board with clamps, and an electronics enclosure.

This setup is recommended if you want to order these popular upgrades and accessories for the machine all at one time.

Which voltage kit should I buy?

- 110V ( ) $1,022
- 220V ( ) $1,061

ADD TO CART

“We're moving into this future where the factory is everywhere, and the design team is everyone. That is an industrial revolution”

Alastair Parvin (TED talk)
http://www.wikihouse.cc

Thank you!