Running QEMU Inside Browser

FOSDEM 2025 (Feb. 2)

Kohei Tokunaga, NTT Corporation

Summary

- QEMU Wasm is QEMU experimentally ported to browser
  - Runs unmodified softwares (e.g. Linux) inside browser
  - Supports TCG(JIT compiler), networking and mount
- Demos
  - Linux VM, containers, Raspberry Pi inside browser

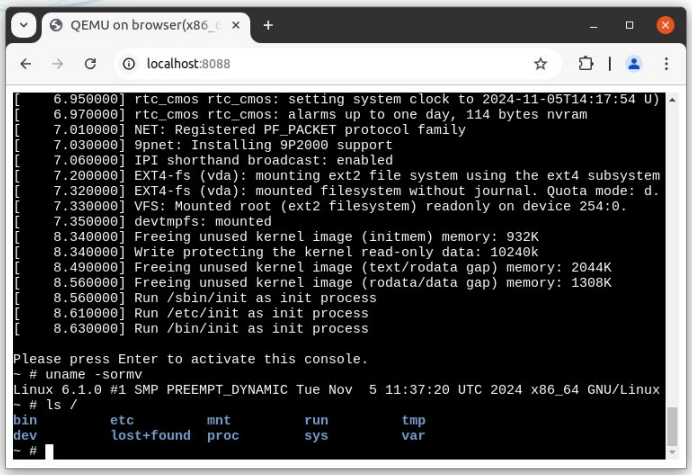

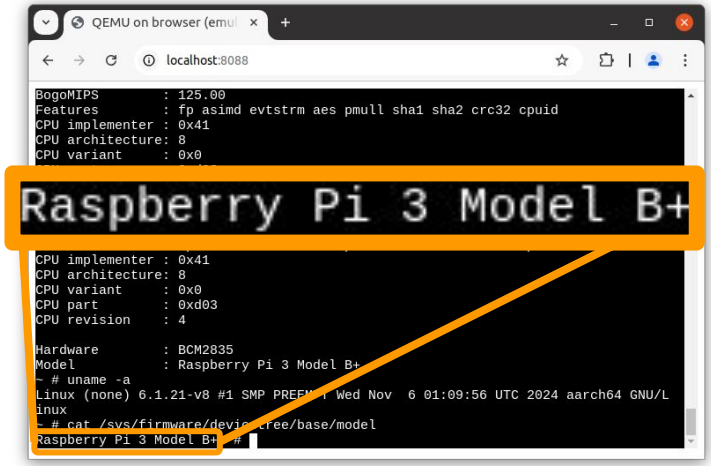

Why porting apps to browsers?

NTT

- Leveraging existing apps on browser (dev environment, playground, building block, etc)
  - Ruby.wasm
  - VSCode Python for the web
  - Sqlite3 on browser
  - Postgres on browser (PGLite)
  - Swift on browser
  - Clang in browser

But, porting apps to browsers is hard

NTT

- Existing softwares (e.g. Linux apps) need re-implementation to run inside browsers
  - Recompilation to Wasm (or JS)
  - Some syscalls (e.g. fork/exec) might be unavailable

- Can we run unmodified applications inside browsers?

QEMU Wasm

QEMU Wasm

https://github.com/ktock/qemu-wasm

- Experimentally ported QEMU to browser, using emscripten
- Supports x86_64, AArch64, RISCV64 guests
- Supports TCG(JIT compiler), mount and networking, etc.

Example: x86_64 Linux on browser

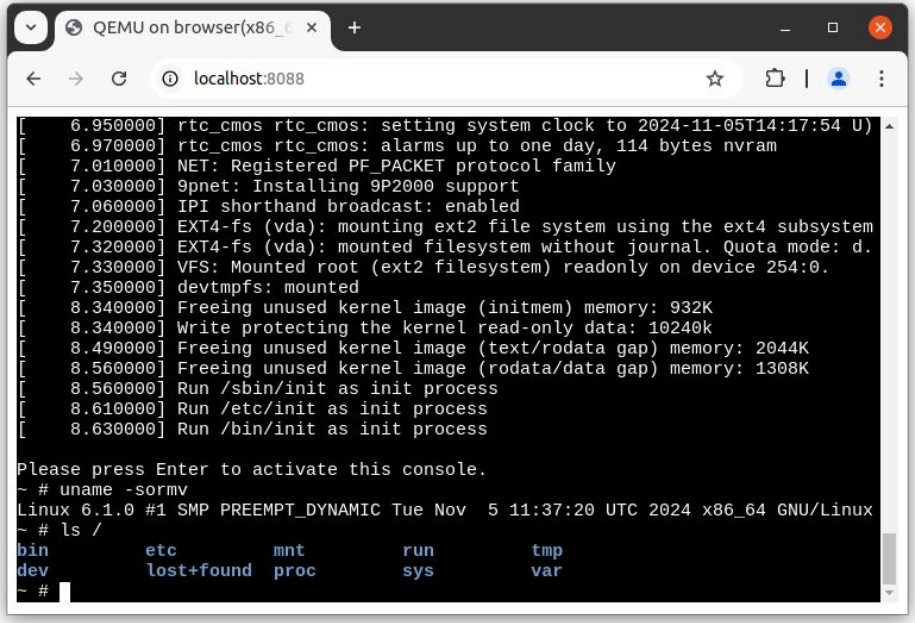

Configuring flags

- Pass flags to QEMU via emscripten's `Module` object in JS

- In the repo, examples are available for NW (`-netdev`), mount (`-virtfs`), migration (`-incoming`) flags

Example configuration

```
Module['arguments'] = [
  '-nographic', '-m', '512M', '-accel', 'tcg,tb-size=500',
  '-L', '/pack/',
  '-drive', 'if=virtio,file=/pack/rootfs.bin',
  '-kernel', '/pack/bzImage',
  '-append', 'console=ttyS0 root=/dev/vda',
];
```

Demo

- x86_64 Alpine Linux inside browser
- Demo page: https://ktock.github.io/qemu-wasm-demo/

How it works?

How it works?

- QEMU (qemu-system-*) is compiled using emscripten
- Dependencies (e.g. kernel and rootfs) are packaged using emscripten's `--preload`
- Relies on browser APIs for JIT and networking (described later)

QEMU TCG (Tiny Code Generator)

- JIT binary translator of QEMU
- IR: Intermediate Representation
  - **Frontend** translates guest binaries to IR
  - **Backend** translates IR to the host arch
- Utilizes multi cores with MTTCG (Multi-Threaded TCG)

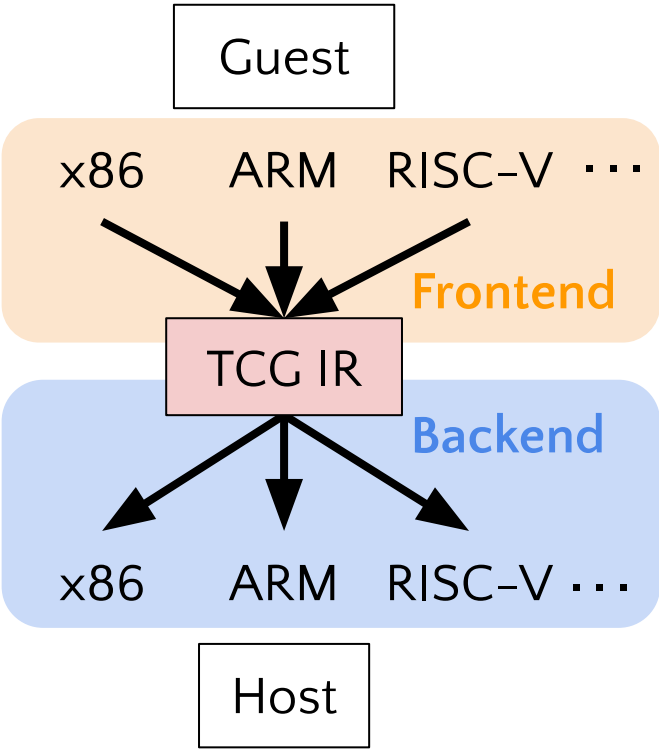

Wasm TCG backend

- Wasm can't execute code generated on memory
- Browser's APIs are used for compilation and execution
  - `WebAssembly.Module` compiles wasm code
  - `WebAssembly.Instance` makes it executable
  - Similar technique as used in other emulators e.g. v86, Qemu.js (32bit guests and no multi-thread core though)
- Enabled emscripten's pthread to enable MTTCG

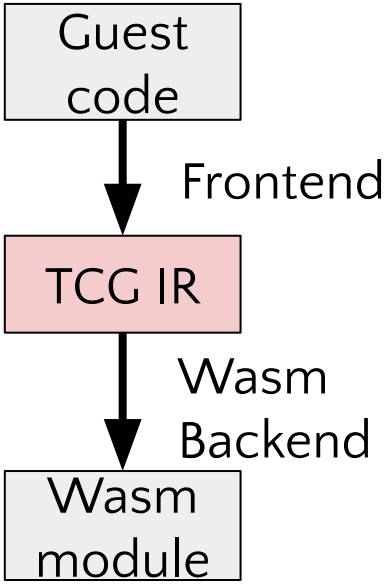

TCG IR to Wasm translation

- Translates each TB of IR to a Wasm module
  - TB=Translation Block; unit of instructions to translate

- Translates an IR instruction to Wasm instruction(s)
  - Added also 64bit IR instructions to enable 64bit guests and MTTCG

- QEMU's memory and helper functions are imported to TB module

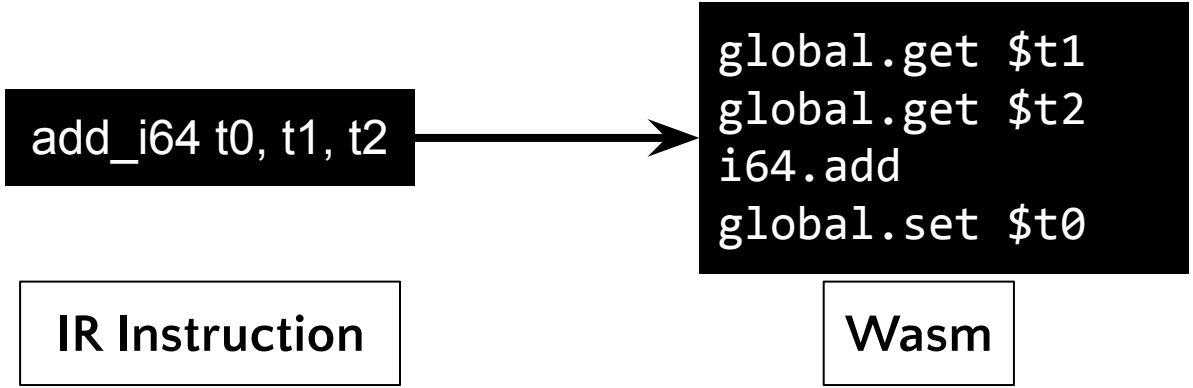

Mitigation for limitations of compiling modules

NTT

- Considerations for creating Wasm modules for each TB
  - Compilation overhead of modules
  - Browsers aren't capable of creating thousands of modules simultaneously

- Enabled both of TCI (built-in IR interpreter; slow) and Wasm backend
  - TBs run on TCI by default
  - TBs running many times (e.g. 1500) are compiled to Wasm

Performance

- Measured duration of compressing 10MB random data using pigz on emulated x86_64 guest
  - pigz is gzip implementation with multi processor support[1]

- Compared QEMU Wasm and Bochs ported to browser[2]
  - Bochs is a portable x86 emulator with interpreter approach
    - we’ve ported this to browser using emscripten

- Browser: Chrome 130.0.6723.58
- Host: Intel(R) Core(TM) i7-10510U CPU @ 1.80GHz (8 cores)
- Script: https://github.com/ktock/container2wasm/commit/07260a2297ffc4ff40ca07dc6c558e4a8f56c154

[1] http://zlib.net/pigz/
[2] https://github.com/ktock/Bochs/tree/c2w-wasm

pigz on emulators inside browser

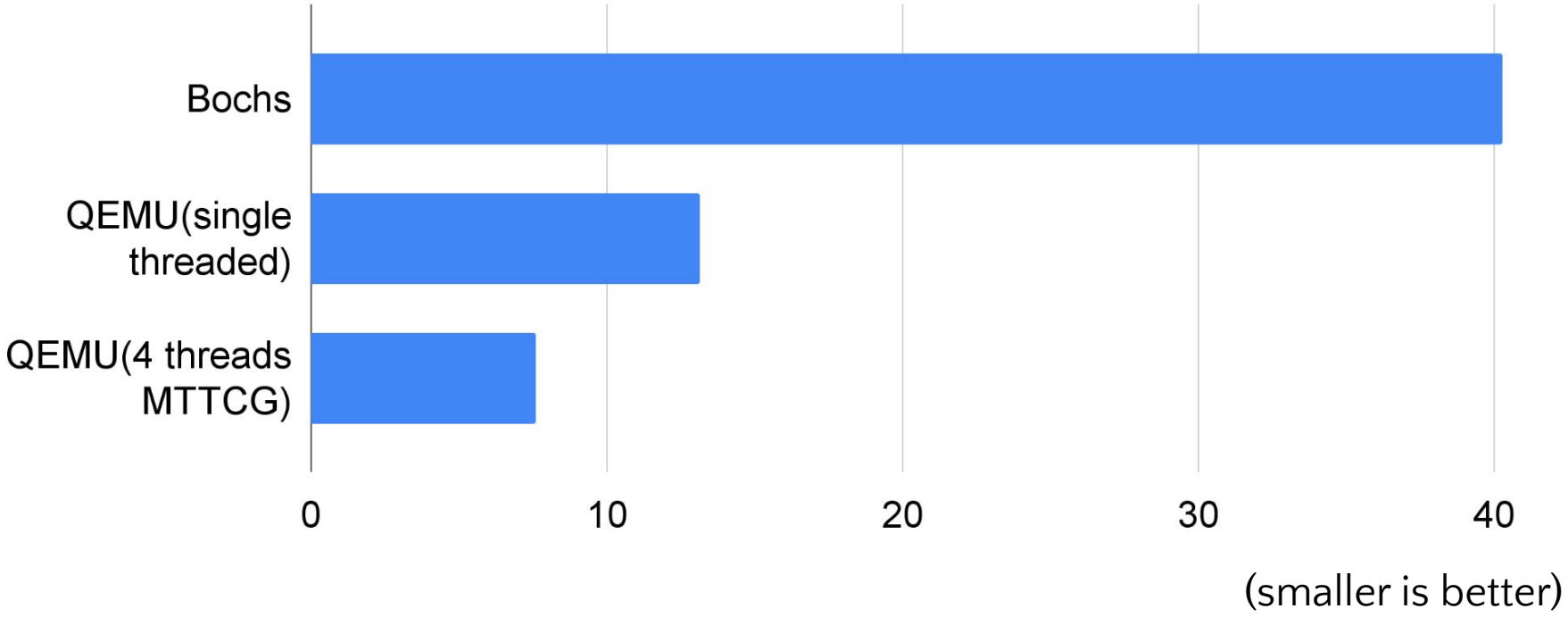

Mounting filesystem

- Emscripten provides its own filesystem as FS API in JS
- QEMU Wasm can mount FS to the guest

Guest

```
$ mount -t 9p share0 /mnt/
$ cat /mnt/file
test
```

QEMU Wasm

```
-virtfs local,path=/share,mount_tag=share0...
```

JS (emscripten)

```
FS.writeFile('/share/file', 'test');
```

Networking

Two approaches are available

- **WebSocket-based approach**
  - Runs NW stack outside of browser
- **Fetch API-based approach**
  - Runs NW stack inside of browser

Networking utilizing WebSocket

- QEMU and the NW stack on the host are connected via WebSocket
- Pros: Destinations aren't limited by browser
- Cons: Maintenance cost of NW stack daemon on the host

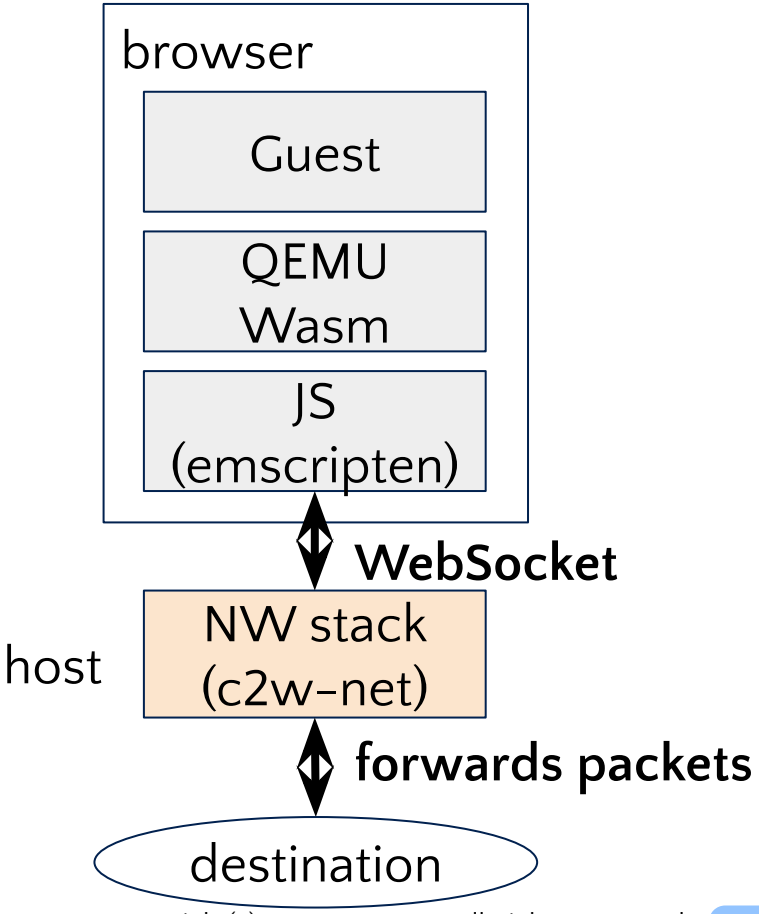

Networking utilizing Fetch API

- NW stack inside browser proxies HTTP(S) connection using Fetch API
- Pros: Easy to maintain (no daemon on the host)
- Cons: HTTP(S) only. Restrictions by Fetch API
  - Limited destination by CORS
  - Forbidden Headers can't be controlled

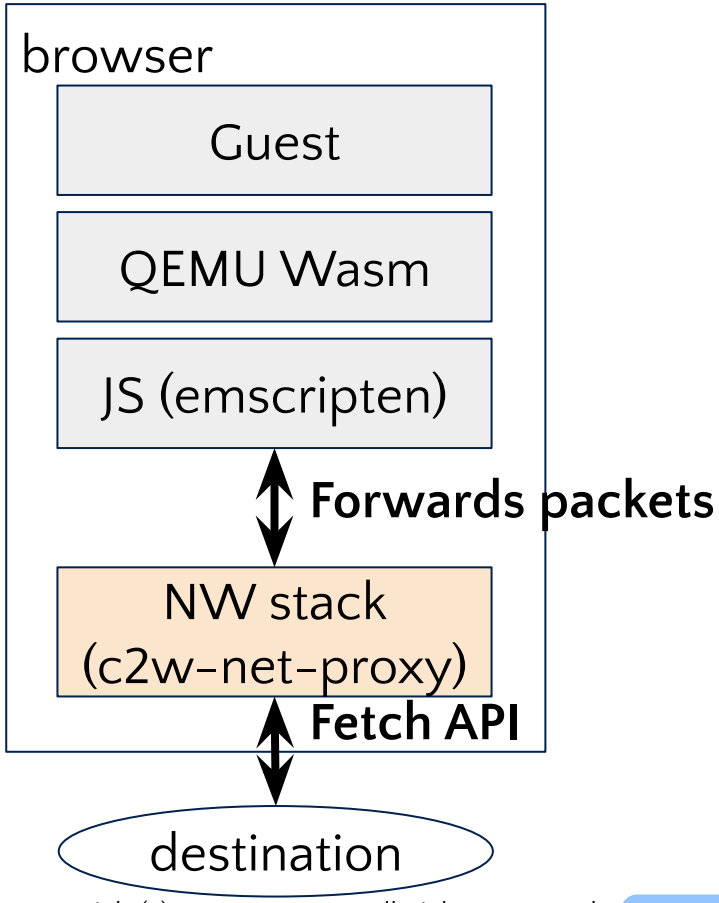

Demos

Raspberry Pi emulation on browser

- Variety of machines (e.g. boards) are available thanks to QEMU
- Example: Raspberry Pi emulation

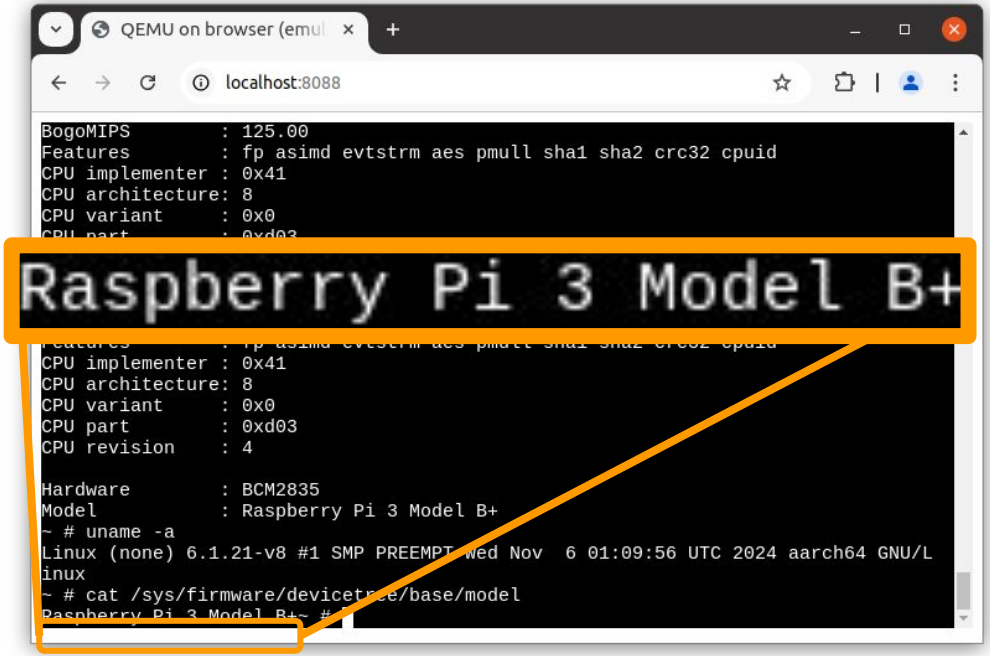

Demo

- Raspberry Pi inside browser
- Demo page: https://ktock.github.io/qemu-wasm-demo/

Containers on browser with container2wasm

https://github.com/ktock/container2wasm

- container2wasm is a converter of a container to a Wasm blob
- Provides `--to-js` flag for enabling QEMU Wasm (>=v0.8)

container Wasm

```
$ c2w --to-js ubuntu:22.04 ./out/
```

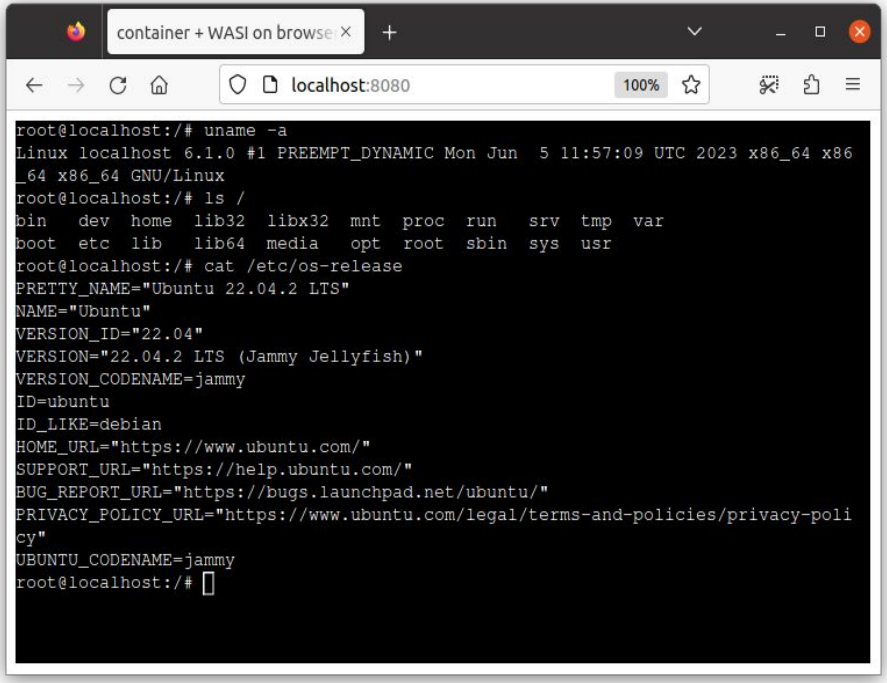

Demo

- Running a container inside browser
- Docs: https://github.com/ktock/container2wasm/tree/v0.8.0/examples/emscripten

Future works

- **Performance & stability improvement for Wasm backend**
  - Still slower than other backends. Further improvement is needed.

- **Integration with more QEMU features**
  - More guest architectures, machines, graphics…
  - User mode QEMU

- **Integration with ecosystem**
  - Accessing package repos (e.g. apk, apt, …) and container registries from browser (w/ CORS restriction)

Related works

- v86: https://github.com/copy/v86
  - x86-compatible on-browser CPU emulator by Fabian Hemmer
  - Supports wide variety of guest OSes (including Windows)
  - Supports JIT translation using browser APIs
  - No support for x86_64 guests

- Qemu.js: https://github.com/atrosinenko/qemujs
  - QEMU ported to browser by Anatoly Trosinenko
  - Supports JIT translation (TCG) using browser APIs
  - Single-threaded, no support for 64bit guests

Summary

- QEMU Wasm is QEMU experimentally ported to browser
  - Runs unmodified softwares (e.g. Linux) inside browser
  - Supports TCG(JIT compiler), networking and mount
- Demos
  - Linux VM, containers, Raspberry Pi inside browser